STRUCTURE (结构)

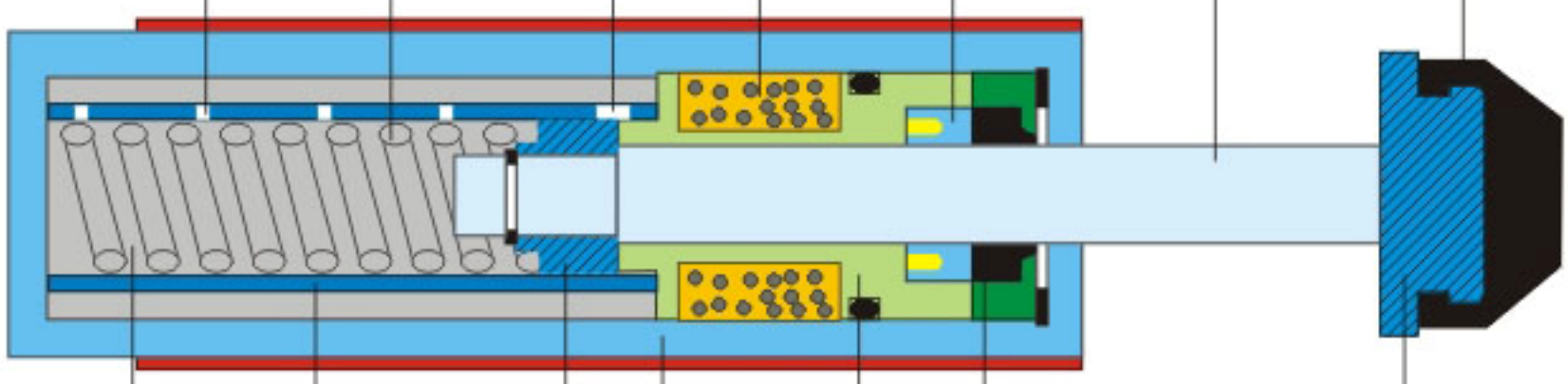

COMPARISON OF CUSHIONING EFFECT (缓冲效果比较)

Spring rubber and cylinder shock absorbing energy can produce a strong resisting force and rebound force at the saving end.

For the damper being lack of elaborate design, it will have a suddenly increasing resisting force when it is under shock.

The resisting force of EA Shock Absorbers' all piston stroke can be seen. The speed of a certain object can be even linear decelerated.

Compared with other cushioning equipment, EA shock absorber has obvious shock absorbing effect.

弹簧、橡胶和气缸缓冲在吸收能量的行程末端会产生非常大的抗力及反弹力。

阻尼器由于缺乏精心设计的油孔系统，受冲击时会有急增的抗力。

从图中可看出EA缓冲器全行程的抗力，物体的速度可被均匀线性减速。

与其他缓冲器装置相比，EA缓冲器有着明显好于其他缓冲器装置的缓冲效果。

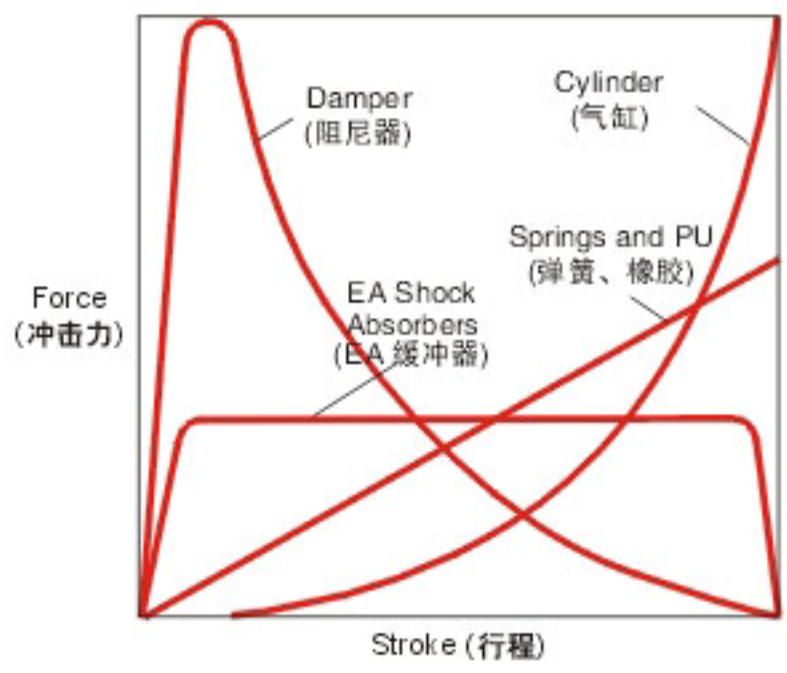

PRINCIPLE (工作原理)

When piston rod is impacted, it will drive piston to press oil in inner tube. Oil will be pressd out through orifice holes of inner tube. At the same time, the oil returns to inner tube through returing hole of inner tube.

当活塞杆受冲击时，活塞杆带动活塞挤压内管里面的液压油，液压油受压后，从内管的排油孔一一排出，同时内管排出的液压油也经回油孔回流到内管。

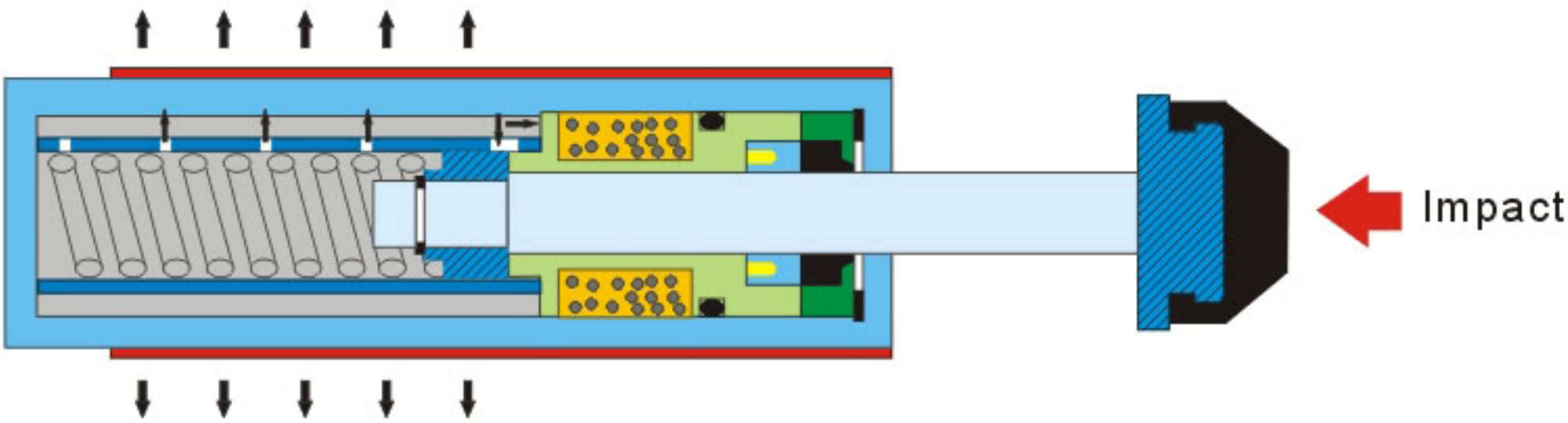

PRINCIPLE (工作原理)

After outside force vanishes, spring makes piston rod immediately return to its position. Oil will return to inner tube through open valve. Then shock absorber will return to be ready position waiting for next action.

外力消失后，弹簧迅速复位活塞杆。油通过打开的逆止阀迅速回到内管，缓冲器恢复初始状态，等待下次动作。

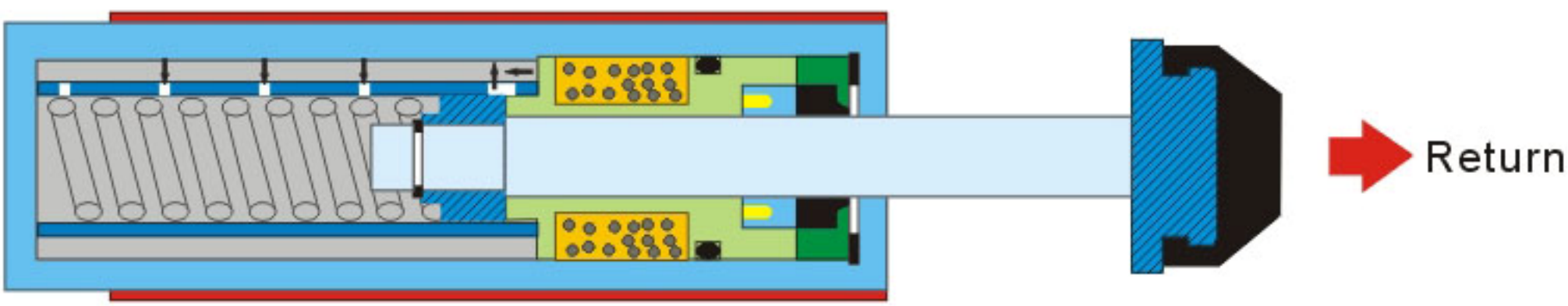

The above is EA shock absorber's principle making running objects gently stop.

EA油压缓冲器就是依照上面原理将运动中的物体平稳停止。

SPECIFICATIONS TABLE (规格一览表)

ASPS

SHOCK ABSORBER SPECIFICATIONS TABLE (油压缓冲器规格一览表)

SC SERIES SELF-COMPENSATION SHOCK ABSORBERS

(SC系列自动补偿式缓冲器)

Model (型号)	Stroke (行程) (mm)	Screw Thread (螺纹公称)	Max. Energy Per Cycle (每次最大吸收能量) (NM)	Max. Energy Per Hour (小时最大吸收能量) (NM)	Effective Weight (有效重量) (kg)	Max. Impact Speed (最高撞击速度) (m/s)	Working Temperature (使用温度) (℃)	Page (页次)
SC0806	6	M 8 × 1.0	2	5400	0.5-50	3	0-66	06
SC1005	5	M10 × 1.0	2.2	6600	0.5-18	3	0-66	06
SC1008	8	M10 × 1.0	3.5	7000	0.8-28	3	0-66	06
SC1210	10	M12 × 1.0	8	14400	2.0-40	3	0-66	06
SC1412	12	M14 × 1.5	18	27000	9.0-40	3.5	0-66	07
SC1416	16	M14 × 1.5	20	30000	3.2-180	3.5	0-66	07
SC1425	25	M14 × 1.5	25	36000	4.1-200	3.5	0-66	07
SC2020	20	M20 × 1.5	35	38000	5.9-640	3.6	0-66	08
SC2030	30	M20 × 1.5	48	48000	7.4-750	3.6	0-66	08
SC2050	50	M20 × 1.5	70	63000	10.8-1000	3.6	0-66	08
SC2525	25	M25 × 1.5	80	72000	12.3-1000	3.6	0-66	08
SC2540	40	M25 × 1.5	110	88000	17-1120	3.6	0-66	10
SC2550	50	M25 × 1.5	120	96000	18.5-1200	3.6	0-66	09
SC2580	80	M25 × 1.5	180	126000	27.8-1500	3.6	0-66	09
SC3660	60	M36 × 1.5	250	150000	31.3-1600	4	0-66	10
SCD2030	30	M20 × 1.5	48	48000	7.4-800	3.6	0-66	09
SCD2035	35	M20 × 1.5	55	55000	8.5-800	3.6	0-66	09

SPECIFICATIONS TABLE (规格一览表)

ASPS

SHOCK ABSORBER SPECIFICATIONS TABLE (油压缓冲器规格一览表)

AD SERIES ADJUSTABLE SHOCK ABSORBER

(AD系列 可调压力式油压缓冲器)

Model (型号)	Stroke (行程) (mm)	Screw Thread (螺纹公称)	Max. Energy Per Cycle (每次最大吸收能量) (NM)	Max. Energy Per Hour (小时最大吸收能量) (NM)	Effective Weight (有效重量) (kg)	Max. Impact Speed (最高撞击速度) (m/s)	Working Temperature (使用温度) (°C)	Page (页次)
AD1410	10	M14X1.5	20	30000	3.3-160	3.5	0-66	12
AD2016	16	M20X1.5	27	40500	4.2-216	3.6	0-66	12
AD2025	25	M20X1.5	35	52500	5.4-280	3.6	0-66	12
AD2525	25	M25X1.5	75	75000	11.6-600	3.6	0-66	12
AD2530	30	M25X1.5	86	86000	13.3-688	3.6	0-66	12
AD2540	40	M25X1.5	105	94500	16.2-840	3.6	0-66	13
AD2550	50	M25X1.5	120	96000	18.5-960	3.6	0-66	13
AD2580	80	M25X1.5	180	120000	27.8-1440	3.6	0-66	13
AD3625	25	M36X1.5	160	112000	20-1280	4	0-66	13
AD3650	50	M36X1.5	320	153600	40-2560	4	0-66	13
AD4225	25	M42X1.5	250	128000	31.3-2000	4	0-66	14
AD4250	50	M42X1.5	500	136000	62.5-4000	4	0-66	14
AD4275	75	M42X1.5	750	150000	93.8-6000	4	0-66	14
AD64050	50	M64X2.0	1850	185000	231-14800	4	0-66	14
AD64100	100	M64X2.0	3690	204000	495-31680	4	0-66	14
AD64150	150	M64X2.0	5540	244000	692-44320	4	0-66	14

HR SERIES - HYDRAULIC SPEED CONTROLLERS (HR系列—液压速度控制器)

Model (型号)	Maximum Stroke (最大行程)	Working Temperature (使用温度)	Maximum Load (最大负荷)	Page (页次)
HR12	12mm	0-70°C	160kgf	25
HR15	15mm	0-70°C	160kgf	25
HR30	30mm	0-70°C	160kgf	25
HR60	60mm	0-70°C	160kgf	25
HR80	80mm	0-70°C	160kgf	25
HR100	100mm	0-70°C	160kgf	25

SC SERIES SELF-COMPENSATION (SC系列自动补偿型)

EA SHOCK ABSORBERS SC SERIES FEATURES AND BENEFITS (EA缓冲器SC系列性能及优点)

1.Unique soft contact, self-compensating function, forming soft and stable shock absorbing effect all the time.

2.Special piston rod and sealing object , efficiently avoid oil leak, ensure long-term and stable shock absorbing.

3.Surface of outer tube is treated by special process, hardness formed to efficiently avoid abrasion and rusting.

4.Screw on outer tube increases heat emanating face, and easily installed.

1.独特的软性接触，并具有自我调节功能，始终形成柔和平稳的缓冲效果。

2.采用特殊处理活塞杆和专用密封件，能有效防止液压油的外渗，保证缓冲器性能的长期稳定。

3.外管表面采用特殊处理技术，形成坚硬密层，有效防止摩擦、生锈。

4.外螺纹的缸体，增大了散热面积，且安装灵活方便。

SELF-COMPENSATING CUSHIONING (自补偿式缓冲)

Self-compensating shock absorbers operate over a wide range of weights and velocities .These shock absorbers are well suited for high drive force, low velocity applications , and where energy conditions may change. Curve A shows the shock force vs . stroke Curve of a self-compensating shock absorber impacted with a low velocity and high drive force. Curve B shows the shock force vs. Stroke curve of a self-compensating shock absorber impacted with a high velocity and low drive force.

自补偿式缓冲器可以在不同重量和速度下运行，这些缓冲器适合于高冲击力、低速度以及能量条件改变的情况。曲线A表示自补偿式缓冲器在低速、高冲击力情况下“冲击力–缓冲行程”的示意图。曲线B表示自补偿式缓冲器在高速、低冲击力的情况下“冲击力–缓冲行程”的示意图。

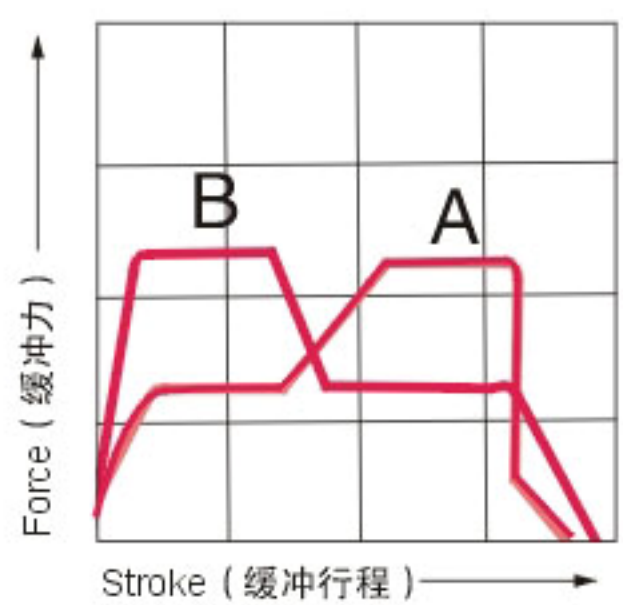

SC SERIES SELF-COMPENSATION (SC系列自动补偿型)

DIMENSIONS(外形尺寸图)

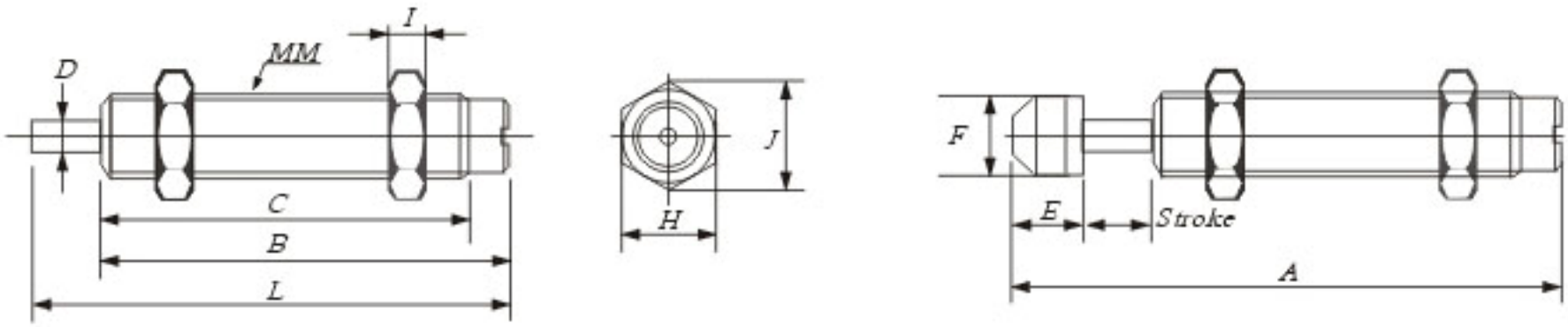

Model (型号)		Without Cap 无受撞头（mm）					With Cap 有受撞头(mm)			Hexagon Nut 六角螺母(mm)		
Without Cap 无受撞头	With Cap 有受撞头	MM	L	B	C	D	A	E	F	H	I	J
SC0806-N	SC0806	M8X1.0	44	38	33	2.8	50	6	6.6	11	3	12.6
SC1005-N	SC1005	M10X1.0	32.7	27.7	22.9	3	38.7	6	8.6	12.7	3	14.5
SC1008-N	SC1008	M10X1.0	51	43	38	3	57	6	8.6	12.7	3	14.5
SC1210-N	SC1210	M12X1.0	60	50	45.5	3	69.5	9.5	10.3	14	4	16

Model (型号)	Stroke (行程) (mm)	Max. Energy Per Cycle (每次最大吸收能量) (NM)	Max. Energy Per Hour (小时最大吸收能量) (NM)	Effective Weight (有效重量) (kg)	Max. Impact Speed (最高撞击速度) (m/s)
SC0806-1	6	2	5400	0.5-4	3
SC0806-2	6	2	5400	2.8-10	1.2
SC0806-3	6	2	5400	6.3-20	0.8
SC1005-1	5	2.2	6600	0.5-5	3
SC1005-2	5	2.2	6600	3.0-10	1.2
SC1005-3	5	2.2	6600	5.5-18	0.8
SC1008-1	8	3.5	7000	0.8-7	3
SC1008-2	8	3.5	7000	4.8-11	1.2
SC1008-3	8	3.5	7000	11.0-28	0.8
SC1210-1	10	8	14400	2.0-12	3
SC1210-2	10	8	14400	5.4-18	1.2
SC1210-3	10	8	14400	18-40	0.8

SC SERIES SELF-COMPENSATION (SC系列自动补偿型)

DIMENSIONS(外形尺寸图)

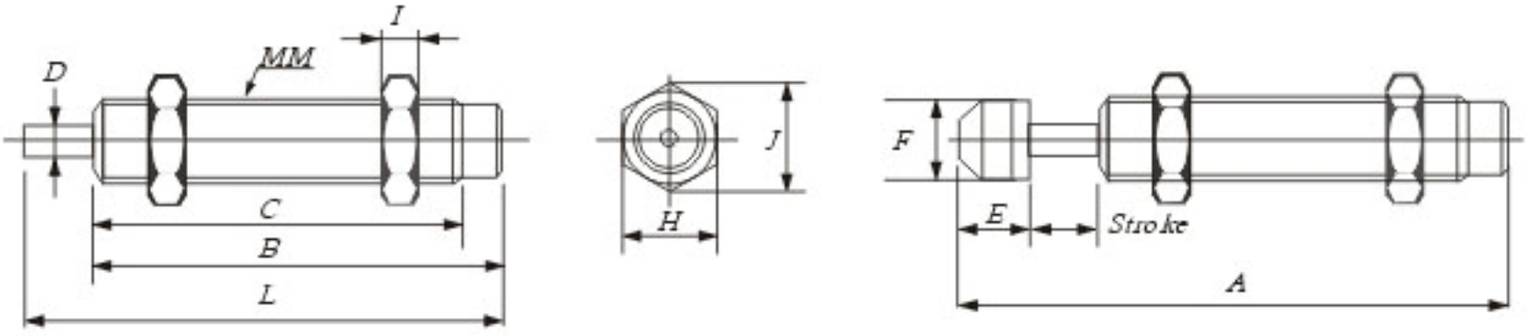

Model (型号)		Without Cap 无受撞头（mm）					With Cap 有受撞头(mm)			Hexagon Nut 六角螺母(mm)		
Without Cap 无受撞头	With Cap 有受撞头	MM	L	B	C	D	A	E	F	H	I	J
SC1412-N	SC1412	M14X1.5	88	76	67	4	102.3	14.3	12	19	5	21.6
SC1416-N	SC1416	M14X1.5	111	95	86	4	125.3	14.3	12	19	5	21.6
SC1425-N	SC1425	M14X1.5	135	110.2	101	4	149.3	14.3	12.5	19	5	21.6

Model (型号)	Stroke (行程) (mm)	Max. Energy Per Cycle (每次最大吸收能量) (NM)	Max. Energy Per Hour (小时最大吸收能量) (NM)	Effective Weight (有效重量) (kg)	Max. Impact Speed (最高撞击速度) (m/s)
SC1412-1	12	18	27000	3.0-12	3.5
SC1412-2	12	18	27000	9.0-40	2
SC1412-3	12	18	27000	36.0-80.0	1
SC1416-1	16	20	30000	3.2-13	3.5
SC1416-2	16	20	30000	10.0-40	2
SC1416-3	16	20	30000	40-180	1
SC1425-1	25	25	36000	4.1-20	3.5
SC1425-2	25	25	36000	12.5-60	2
SC1425-3	25	25	36000	50-200	1

SC SERIES SELF-COMPENSATION (SC系列自动补偿型)

DIMENSIONS(外形尺寸图)

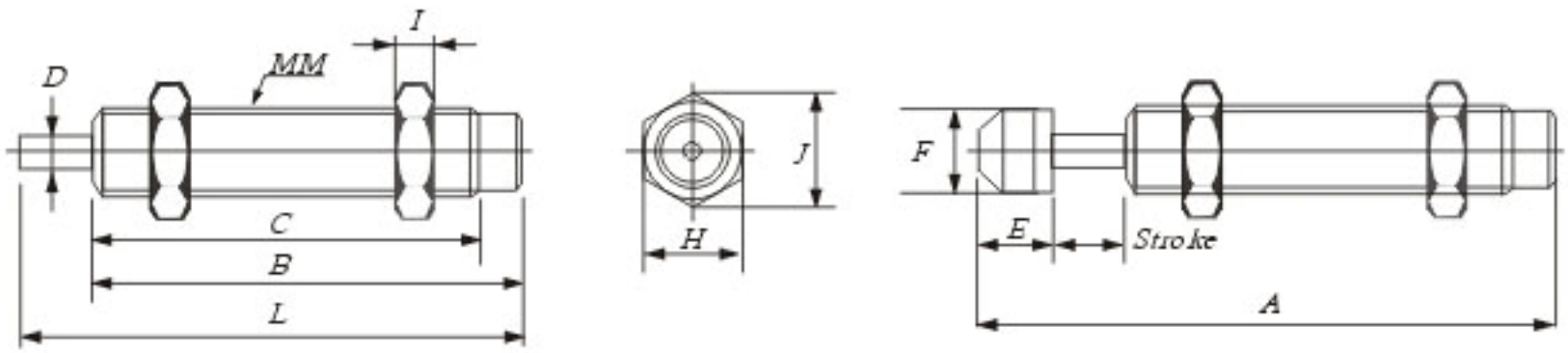

Model (型号)		Without Cap 无受撞头（mm）					With Cap 有受撞头(mm)			Hexagon Nut 六角螺母(mm)		
Without Cap 无受撞头	With Cap 有受撞头	MM	L	B	C	D	A	E	F	H	I	J
SC2020-N	SC2020	M20X1.5	130	110	101	6	147.5	17.5	18	26	8	29.7
SC2030-N	SC2030	M20X1.5	140	110	101	6	157.5	17.5	18	26	8	29.7
SC2050-N	SC2050	M20X1.5	217	167	158	6	234.5	17.5	18	26	8	29.7
SC2525-N	SC2525	M20X1.5	136	111	101	8	156	20	22	32	10	36.7

Model (型号)	Stroke (行程) (mm)	Max. Energy Per Cycle (每次最大吸收能量) (NM)	Max. Energy Per Hour (小时最大吸收能量) (NM)	Effective Weight (有效重量) (kg)	Max. Impact Speed (最高撞击速度) (m/s)
SC2020-1	20	38	38000	5.9-25	3.6
SC2020-2	20	38	38000	19-98	2
SC2020-3	20	38	38000	76-640	1
SC2030-1	30	48	48000	7.4-30	3.6
SC2030-2	30	48	48000	24-112	2
SC2030-3	30	48	48000	96-750	1
SC2050-1	50	70	63000	10.8-50	3.6
SC2050-2	50	70	63000	35-160	2
SC2050-3	50	70	63000	140-1000	1
SC2525-1	25	80	72000	12.3-60	3.6
SC2525-2	25	80	72000	40-182	2
SC2525-3	25	80	72000	160-1000	1

SC SERIES SELF-COMPENSATION (SC系列自动补偿型)

DIMENSIONS(外形尺寸图)

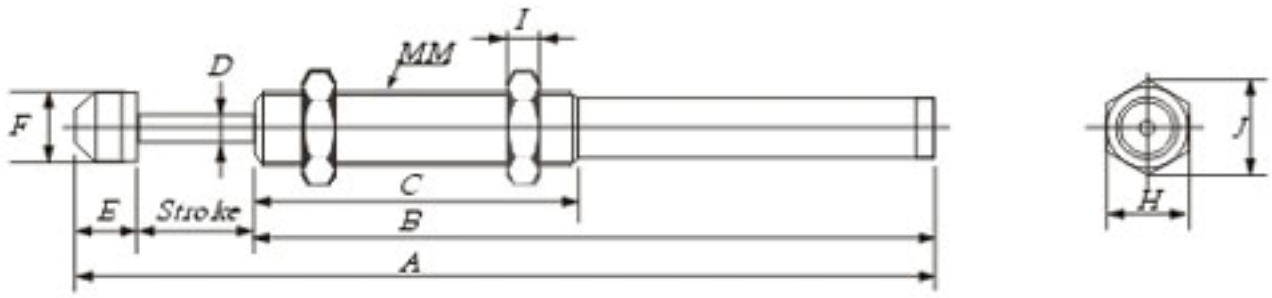

Model (型号)	MM	A	B	C	D	E	F	H	I	J
SC2550	M25X1.5	240.5	170.5	100	8	20	22	32	10	36.7
SC2580	M25X1.5	337	237	100	8	20	22	32	10	36.7

Model (型号)	Stroke (行程) (mm)	Max. Energy Per Cycle (每次最大吸收能量) (NM)	Max. Energy Per Hour (小时最大吸收能量) (NM)	Effective Weight (有效重量) (kg)	Max. Impact Speed (最高撞击速度) (m/s)
SC2550-1	50	120	96000	18.5-90	3.6
SC2550-2	50	120	96000	60-290	2
SC2550-3	50	120	96000	240-1200	1
SC2580-1	80	180	12600	27.8-120	3.6
SC2580-2	80	180	12600	90-400	2
SC2580-3	80	180	12600	360-1500	1

DIMENSIONS(外形尺寸图)

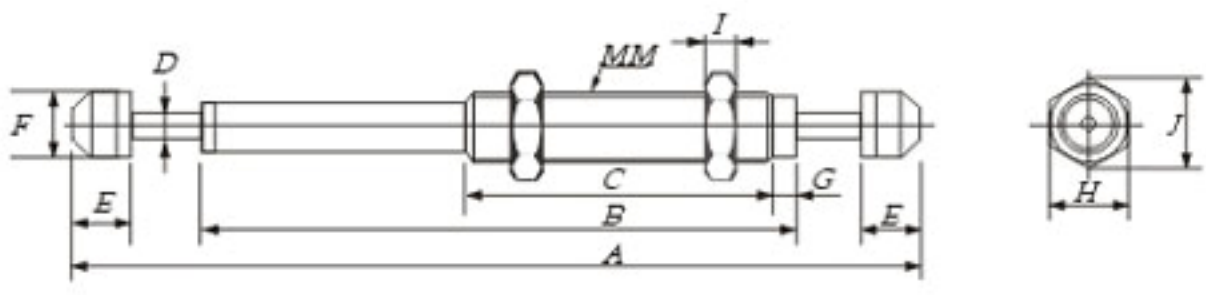

Model (型号)	MM	A	B	C	D	E	F	G	H	I	J
SCD2030	M20X1.5	189	123	44	6	18	18	3	26	8	29.7
SCD2035	M20X1.5	223	123	44	6	15	18	3	26	8	29.7

SC SERIES SELF-COMPENSATION (SC系列自动补偿型)

Model (型号)	Stroke (行程) (mm)	Max. Energy Per Cycle (每次最大吸收能量) (NM)	Max. Energy Per Hour (小时最大吸收能量) (NM)	Effective Weight (有效重量) (kg)	Max. Impact Speed (最高撞击速度) (m/s)
SCD2030-1	30	48	48000	7.4-30	3.6
SCD2030-2	30	48	48000	24-112	2
SCD2030-3	30	48	48000	96-800	1
SCD2035-1	35	55	55000	8.5-35	3.6
SCD2035-2	35	55	55000	27.5-136	2
SCD2035-3	35	55	55000	110-800	1

DIMENSIONS(外形尺寸图)

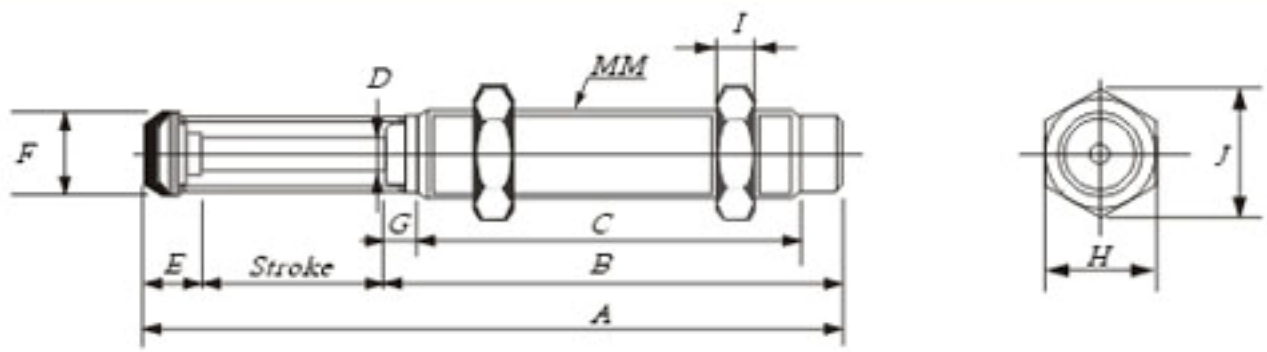

Model (型号)	MM	A	B	C	D	E	F	G	H	I	J
SC2540	M25X1.5	213	137	117	8	36	22	10	32	10	36.7
SC3660	M25X1.5	247.8	162	134	10	25.8	35	17	46	15	53

Model (型号)	Stroke (行程) (mm)	Max. Energy Per Cycle (每次最大吸收能量) (NM)	Max. Energy Per Hour (小时最大吸收能量) (NM)	Effective Weight (有效重量) (kg)	Max. Impact Speed (最高撞击速度) (m/s)
SC2540-1	40	110	88000	17.0-70	3.6
SC2540-2	40	110	88000	55-250	2
SC2540-3	40	110	88000	220-1120	1
SC3660-1	60	250	15000	31.3-160	4
SC3660-2	60	250	15000	125-600	2
SC3660-3	60	250	15000	500-1600	1

AD SERIES ADJUSTABIE (AD系列可调节型)

EA SHOCK ABSORBERS AD SERIES FEATURES AND BENEFITS (EA缓冲器AD系列性能及优点)

1.Adjustable shock absorber, can be adjusted to perfect and ideal shock absorbing effect according to you need.
2.Special piston rod and sealing object, efficiently avoid oil leak, ensure long-term and stable shock absorbing.
3.Surface of outer tube is treated by special process, hardness formed to efficiently avoid abrasion and rusting.
4.Screw on outer tube increases heat emanating face, and easily installed.

1.可调型缓冲器，能根据您的需要调节最完美最理想的缓冲效果。
2.采用特殊处理活塞杆和专用密封件，能有效防止液压油的外渗，保证缓冲器性能的长期稳定。
3.外管表面采用特殊处理技术，形成坚硬密层，有效防止摩擦、生锈。
4.外螺纹的缸体，增大了散热面积，且安装灵活方便。

ADJUSTMENT TECHNIQUES（调节技巧）

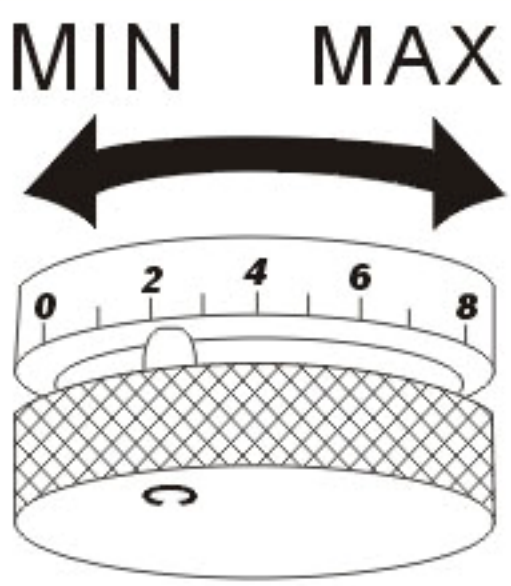

360° circle adjustable, minimum energy absorbing at 0 position, max at 8 position. Either right or left turning can adjust absorbing effect you want.

360° 循环调节，0位时缓冲吸收能量最小，8位时缓冲吸收能量最大，正、反转调节均能达到您需要的缓冲效果。

AD SERIES ADJUSTABIE (AD系列可调节型)

DIMENSIONS(外形尺寸图)

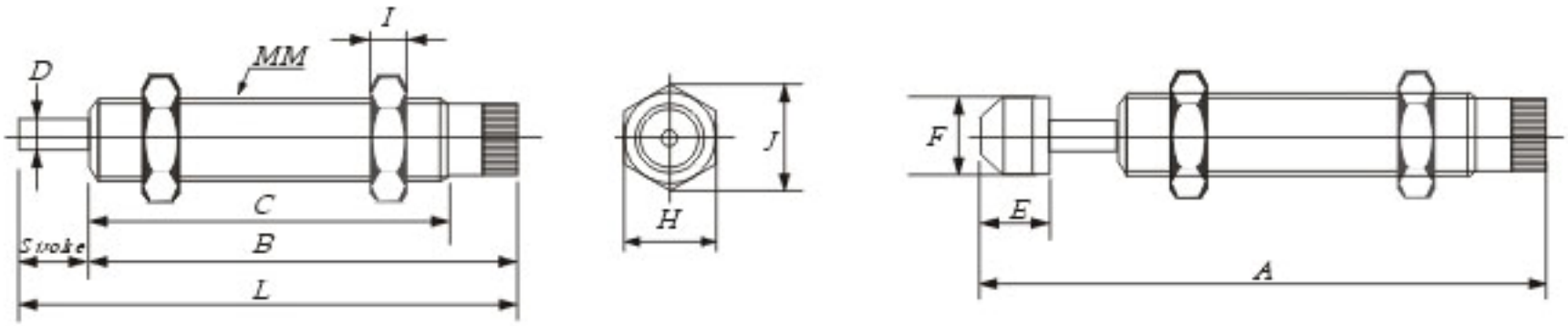

Model (型号)		Without Cap 无受撞头 (mm)					With Cap 有受撞头(mm)			Hexagon Nut 六角螺母(mm)		
Without Cap 无受撞头	With Cap 有受撞头	MM	L	B	C	D	A	E	F	H	I	J
AD1410-N	AD1410	M14X1.5	98.5	88.5	72.5	4	112.8	14.3	12	19	6	21.6
AD2016-N	AD2016	M20X1.5	133	117	101	6	150.5	17.5	18	26	8	29.7
AD2025-N	AD2025	M20X1.5	142	117	101	6	159.5	17.5	17.8	26	8	29.7
AD2525-N	AD2525	M25X1.5	143.5	118.5	101	8	163.5	20	22	32	10	36.7
AD2530-N	AD2530	M25X1.5	148.5	118.5	101	8	168.5	20	22	32	10	36.7

Model (型号)	Stroke (行程) (mm)	Max. Energy Per Cycle (每次最大吸收能量) (NM)	Max. Energy Per Hour (小时最大吸收能量) (NM)	Effective Weight (有效重量) (kg)	Max. Impact Speed (最高撞击速度) (m/s)
AD1410-N	10	20	30000	3.3-160	3.5
AD1410	10	20	30000	3.3-160	3.5
AD2016-N	16	27	40500	4.2-216	3.6
AD2016	16	27	40500	4.2-216	3.6
AD2025-N	25	35	52500	5.4-280	3.6
AD2025	25	35	52500	5.4-280	3.6
AD2525-N	25	75	75000	11.6-600	3.6
AD2525	25	75	75000	11.6-600	3.6
AD2530-N	30	86	86000	13.3-688	3.6
AD2530	30	86	86000	13.3-688	3.6

AD SERIES ADJUSTABIE (AD系列可调节型)

DIMENSIONS(外形尺寸图)

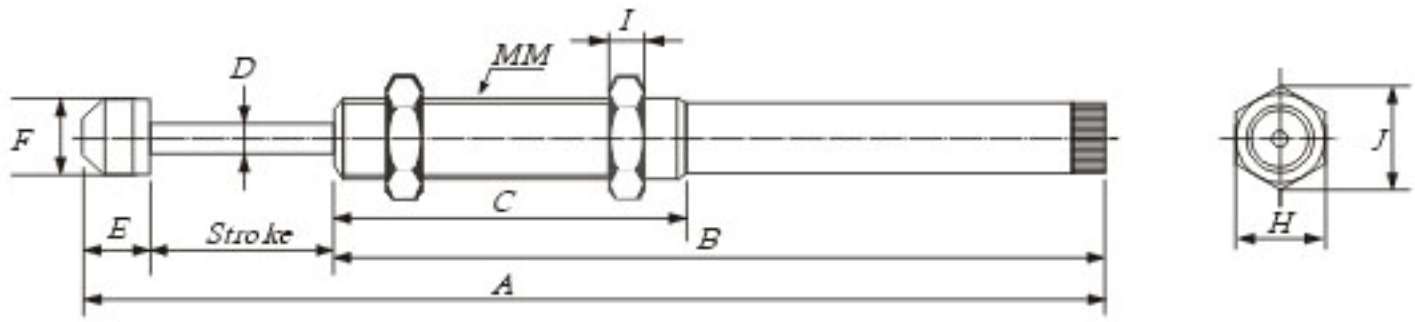

Model (型号)	MM	A	B	C	D	E	F	H	I	J
AD2550	M25X1.5	247.5	177.5	100	8	20	22	32	10	36.7
AD2580	M25X1.5	344	244	100	8	20	22	32	10	36.7

Model (型号)	Stroke (行程) (mm)	Max. Energy Per Cycle (每次最大吸收能量) (NM)	Max. Energy Per Hour (小时最大吸收能量) (NM)	Effective Weight (有效重量) (kg)	Max. Impact Speed (最高撞击速度) (m/s)
AD2550	50	120	96000	18.5-960	3.6
AD2580	80	180	120000	27.8-1440	3.6

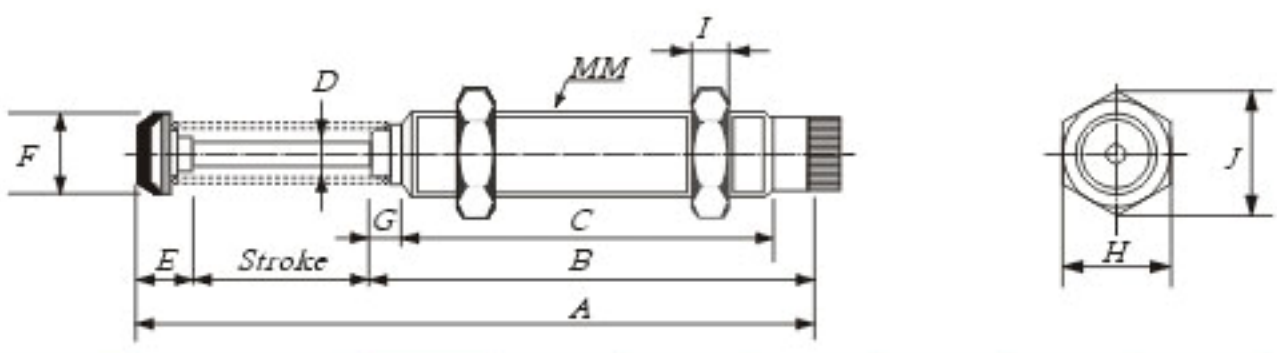

Model (型号)	MM	A	B	C	D	E	F	G	H	I	J
AD2540	M25X1.5	221.1	144.5	117	8	36.6	22	10	32	10	36.7
AD3625	M36X1.5	183.8	133	103	10	25.8	35	10	46	10	53
AD3650	M36X1.5	246.8	171	134	10	25.8	35	17	46	15	53

Model (型号)	Stroke (行程) (mm)	Max. Energy Per Cycle (每次最大吸收能量) (NM)	Max. Energy Per Hour (小时最大吸收能量) (NM)	Effective Weight (有效重量) (kg)	Max. Impact Speed (最高撞击速度) (m/s)
AD2540	40	105	94500	16.2-840	3.6
AD3625	25	160	112000	20-1280	4
AD3650	50	320	153600	40-2560	4

AD SERIES ADJUSTABIE (AD系列可调节型)

DIMENSIONS(外形尺寸图)

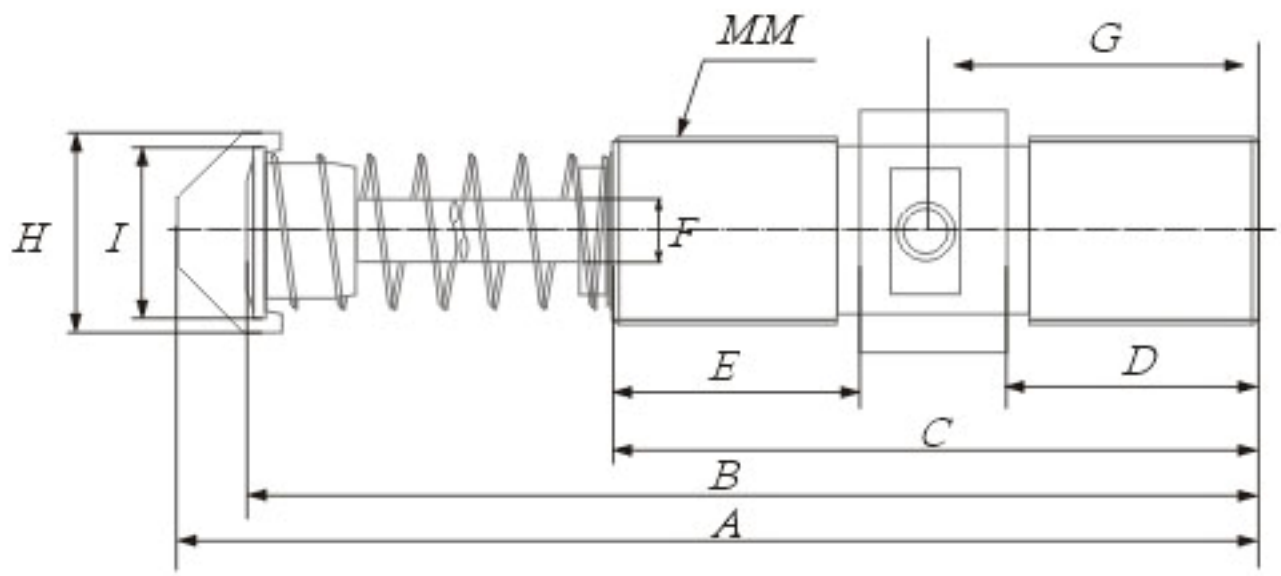

Model (型号)	MM	Stroke (行程) (mm)	A	B	C	D	E	F	G	H	I
AD4225	M42X1.5	25	167	152	94	32	29	14	49	45	38
AD4250	M42X1.5	50	217	202	119	44	42	14	61.5	45	38
AD4275	M42X1.5	75	267	252	144	56	55	14	74	45	38
AD64050	M64X2.0	50	241	224	138	50	49	20	67.5	58	50
AD64100	M64X2.0	100	341	324	188	74	74	20	95	58	50
AD64150	M64X2.0	100	471	454	238	75	75	20	141	58	50

Model (型号)	Stroke (行程) (mm)	Max. Energy Per Cycle (每次最大吸收能量) (NM)	Max. Energy Per Hour (小时最大吸收能量) (NM)	Effective Weight (有效重量) (kg)	Max. Impact Speed (最高撞击速度) (m/s)
AD4225	25	250	128000	31.3-2000	4
AD4250	50	500	136000	62.5-4000	4
AD4275	75	750	150000	93.8-6000	4
AD64050	50	1850	185000	231-14800	4
AD64100	100	3690	204000	495-31680	4
AD64150	150	5540	244000	692-44320	4

ERB SERIES SELF-COMPENSATION (ERB系列自动补偿型)

DIMENSIONS(外形尺寸图)

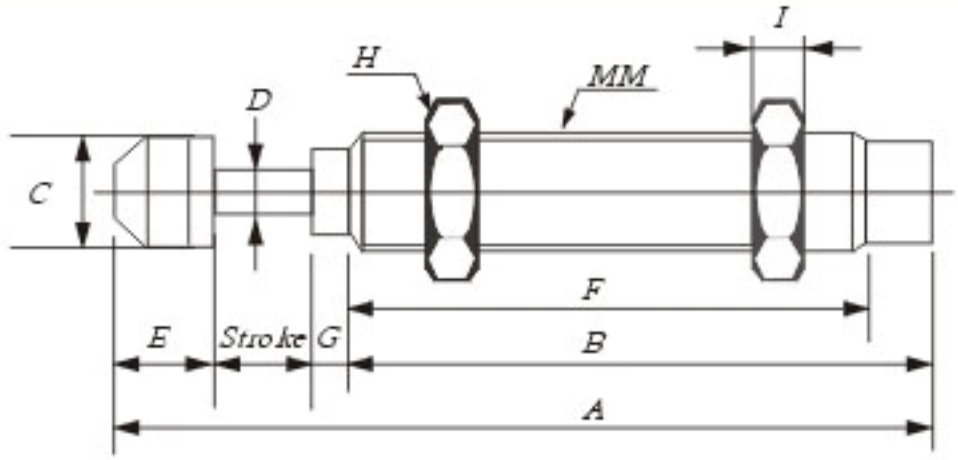

Model (型号)	MM	Stroke (行程) (mm)	A	B	C	D	E	F	G	H	I
ERB0806-N	M8X1.0	6	-	40.6	-	2.8	-	33.6	2	11	3
ERB0806	M8X1.0	6	55.2	40.6	6.6	2.8	8.6	33.6	2	11	3
ERB1007-N	M10X1.0	7	-	47	-	3	-	39	3	12.7	3
ERB1007	M10X1.0	7	62.6	47	8.6	3	8.6	39	3	12.7	3
ERB1210-N	M12X1.0	10	-	50	-	3	-	45.5	3	14	4
ERB1210	M12X1.0	10	68.4	50	10.3	3	8.4	45.5	3	14	4
ERB1412-N	M14X1.5	12	-	67	-	4	-	58	4	19	6
ERB1412	M14X.15	12	90	67	12	4	11	58	4	19	6
ERB2015-N	M20X1.5	15	-	73	-	6	-	62	4	26	8
ERB2015	M20X1.5	15	103	73	18	6	15	62	4	26	8
ERB2525-N	M25X1.5	25	-	92	-	8	-	82	5	32	10
ERB2525	M25X1.5	25	135.8	92	22	8	18.8	82	5	32	10
ERB2725-N	M27X1.5	25	-	111	-	8	-	86	5	36	6
ERB2725	M27X1.5	25	142.8	99	22	8	18.8	86	5	36	6

Model (型号)	Stroke (行程) (mm)	Max. Energy Per Cycle (每次最大吸收能量) (NM)	Max. Energy Per Hour (小时最大吸收能量) (NM)	Effective Weight (有效重量) (kg)	Max. Impact Speed (最高撞击速度) (m/s)	Working Temperature (使用温度) (℃)
ERB0806-N	6	3	6000	0.7-24	3	0-66
ERB0806	6	3	6000	0.7-24	3	0-66
ERB1007-N	7	5	10000	1.1-40	3	0-66
ERB1007	7	5	10000	1.1-40	3	0-66
ERB1210-N	10	10	18000	2.2-80	3	0-66
ERB1210	10	10	18000	2.2-80	3	0-66
ERB1412-N	12	20	30000	3.3-160	3.5	0-66
ERB1412	12	20	30000	3.3-160	3.5	0-66
ERB2015-N	15	40	48000	6.2-320	3.6	0-66
ERB2015	15	40	48000	6.2-320	3.6	0-66
ERB2525-N	25	80	64000	12.3-640	3.6	0-66
ERB2525	25	80	64000	12.3-640	3.6	0-66
ERB2725-N	25	85	68000	13.1-680	3.6	0-66
ERB2725	25	85	68000	13.1-680	3.6	0-66

ZC ZD SERIES SHOCK ABSORBERS (ZC ZD系列阻挡气缸用缓冲器)

ZD SERIES (ZD系列)阻挡气缸上用的可调缓冲器

DIMENSIONS (mm) (外形尺寸图)

ZD1408

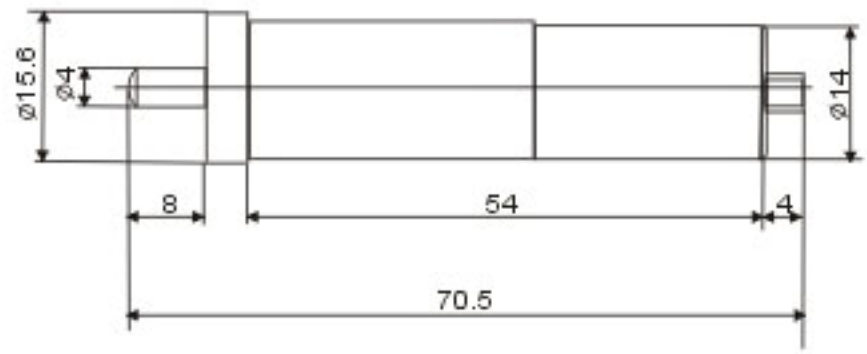

ZD2210

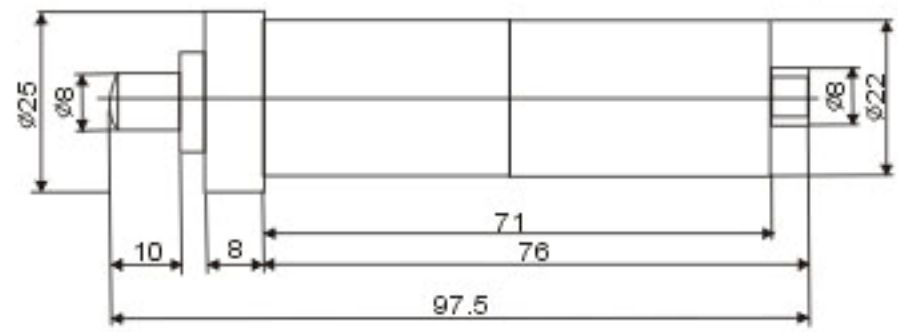

ZC SERIES (ZC系列)阻挡气缸上用的不可调缓冲器

DIMENSIONS (mm) (外形尺寸图)

ZC1408

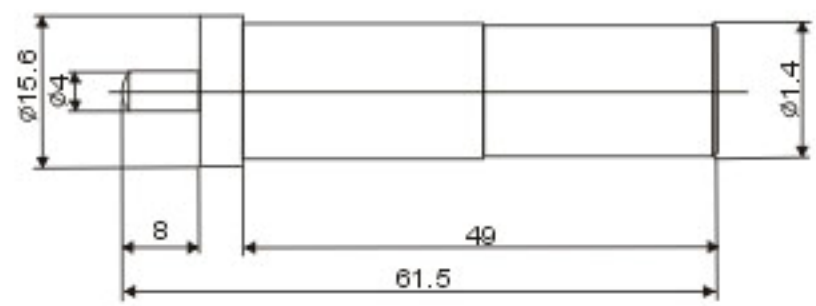

ZC2010

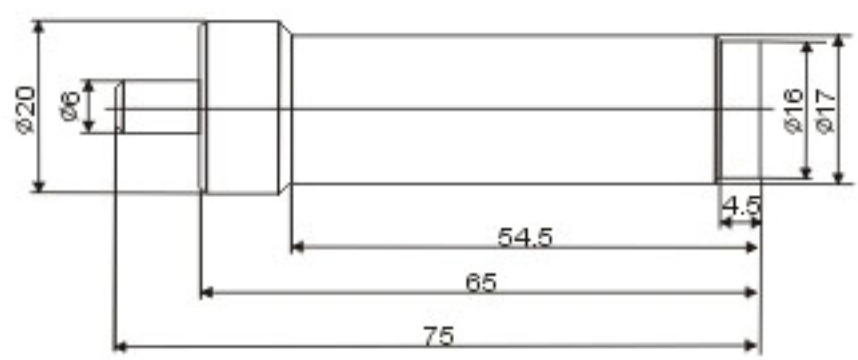

MODEL SELECTION (型号选定方法)

1 DEFINITUDE DEVICE COLLIDING MODEL (明确装置的冲撞模式)

Plane Motion (水平运动)
- Simplex plane colliding (单纯的水平冲撞)
- Colliding with the thrust of cylinder (伴随气缸推力的冲撞)
- Colliding with driving force of motor (伴随马达的驱动力的冲撞)

Vertical Motion (垂直运动)
- Colliding of the free fall power (自由落下的冲撞)
- Colliding with the thrust of cylinder(down) (伴随着气缸推力的冲撞)(下降)
- Colliding with the thrust of cylinder(up) (伴随着气缸推力的冲撞)(上升)

Slope Motion (倾斜运动)
- Colliding when sliding freely (自由滑走而产生的冲撞)
- Colliding with cylinder' down thrust (伴随气缸推力的冲撞)(下降)
- Colliding with cylinder' up thrust (伴随气缸推力的冲撞)(上升)

Gyration and Shake Motion (回转和摇动运动)
- Colliding by the free fall power (因自由摇动落下而产生的冲撞)
- Colliding with motor's torsion etc. (Shake) (伴随着马达等扭转的冲撞)(摇动)
- Colliding with motor's torsion etc. (Circumgyrate) (伴随着马达等扭转的冲撞)(旋转)

2 THE NECESSARY ITEMS IN ENERGY CALCULATING (计算能量所必须明确的条件・项目)

E=Total energy (总能量) (Nm)
E_1=Kinetic energy (动能) (Nm)
E_2=Work energy (做功能) (Nm)
M=Colliding mass (冲撞质量) (kg)
V=Colliding speed (冲撞速度) (m/s)
S=Stroke (行程) (m)
F=force (推力) (N)
g=Acceleration of gravity (重力加速度) 9.8m/s²
H=Falling height (落下高度) (m)
T=Torsion (扭矩) (N・m)
Td=Torsion when motor starts (马达起动扭矩) (N・m)
K=Deceleration (减速比)
θ、α、β=Slope angle (倾斜角) (deg)
L=Colliding matter moving distance (冲撞物移动距离) (m)
Slope free fall (倾斜自由落下)
R=Distance from circumgyrating center to colliding point (从旋转中心到冲撞点距离) (m)
r=Distance from circumgyrating center to the center of gravity (从旋转中心到重心距离) (m)
G=Center of gravity place colliding model (重心位置)
ω=Speed of angle (角速度) (rad/s)
J=Inertia moment (惯性力矩) kg・m² {N・m・sec²}
D=Diameter (直径) (m)
N=Circumgyrating number (回转数) (rpm)
Me=Effective weight (有效重量) (kg)

COLLIDING MODE CUTLINE (冲撞模式图例)

	Plane colliding(水平冲撞)			Vertical colliding(垂直冲撞)		
	Simplex plane colliding (单纯的水平冲撞)	With cylinder's thrust (有气缸推力时)	With motor's thrust (有马达推力时)	Free falling (自由落下)	Cylinder lower limiter (气缸下限限位器)	Cylinder upper limiter (气缸上限限位器)
Examples in using (使用例)	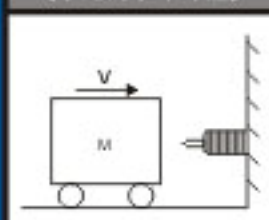	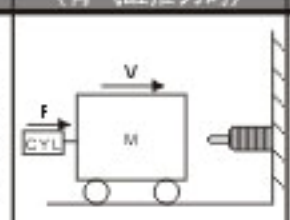	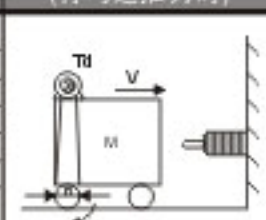	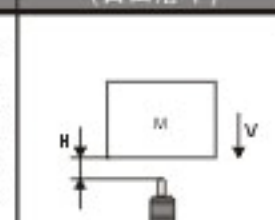	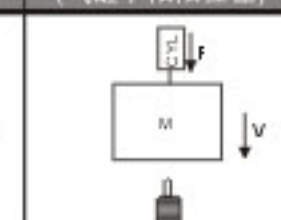	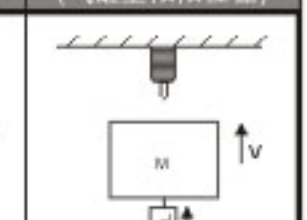
Kinetic energy (动能) E_1(Nm)	$\frac{1}{2}\cdot M\cdot V^2$	$\frac{1}{2}\cdot M\cdot V^2$	$\frac{1}{2}\cdot M\cdot V^2$	$\frac{1}{2}\cdot M\cdot V^2$	$\frac{1}{2}\cdot M\cdot V^2$	$\frac{1}{2}\cdot M\cdot V^2$
Work energy (做功能) E_2(Nm)	———	$F\cdot S$	$2\cdot\frac{K}{D}\cdot Td\cdot S$	$M\cdot g\cdot S$	$(M\cdot g+F)\cdot S$	$(F-M\cdot g)\cdot S$
Total energy 总能量E(Nm)	$E=E_1$	$E=E_1+E_2$	$E=E_1+E_2$	$E=E_1+E_2$	$E=E_1+E_2$	$E=E_1+E_2$
Effective Weight 有效重量 Me(kg)	$Me=M$	$Me=\frac{2\cdot E}{V^2}$	$Me=\frac{2\cdot E}{V^2}$	$Me=\frac{2\cdot E}{V^2}$ $(V=\sqrt{2\cdot g\cdot H})$	$Me=\frac{2\cdot E}{V^2}$	$Me=\frac{2\cdot E}{V^2}$

	Slope colliding(倾斜冲撞)			Shake colliding(摇动冲撞)		Circumgyrate colliding (回转冲撞)
	Free falling (自由落下)	When cylinder pressure existing (气缸压力存在时)	When cylinder pressure existing (气缸压力存在时)	Free falling (自由落下)	The existing of torsion of motor etc. (马达等的扭矩存在)	The existing of torsion of motor etc. (马达等的扭矩存在)
Examples in using (使用例)	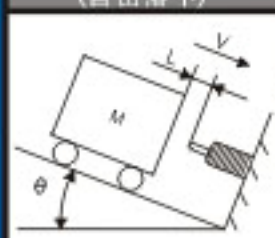	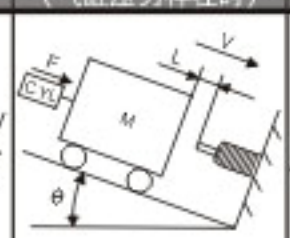	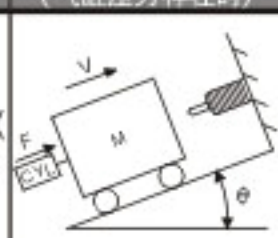	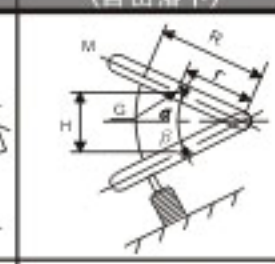	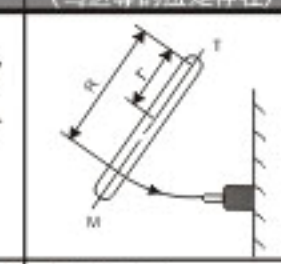	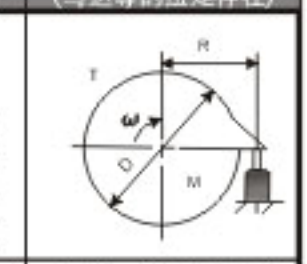
Kinetic energy (动能) E_1(Nm)	$\frac{1}{2}\cdot M\cdot V^2$	$\frac{1}{2}\cdot M\cdot V^2$	$\frac{1}{2}\cdot M\cdot V^2$	$M\cdot g\cdot H$	$\frac{J\cdot\omega^2}{2}=\frac{1}{2}\cdot M\cdot V^2$	$\frac{J\cdot\omega^2}{2}=\frac{M\cdot D^2\cdot\omega^2}{2}$
Work energy (做功能) E_2(Nm)	$M\cdot g\cdot S\cdot\sin\theta$	$(M\cdot g\cdot\sin\theta+F)\cdot S$	$(F-M\cdot g\cdot\sin\theta)\cdot S$	$\frac{r}{R}\cdot M\cdot g\cdot S$	$\frac{T}{R}\cdot S$	$\frac{T}{R}\cdot S$
Total energy 总能量E(Nm)	$E=E_1+E_2$	$E=E_1+E_2$	$E=E_1+E_2$	$E=E_1+E_2$	$E=E_1+E_2$	$E=E_1+E_2$
Effective Weight 有效重量 Me(kg)	$Me=\frac{2\cdot E}{V^2}$ $(V=\sqrt{2\cdot g\cdot L\cdot\sin\theta})$	$Me=\frac{2\cdot E}{V^2}$	$Me=\frac{2\cdot E}{V^2}$	$Me=\frac{2\cdot E}{V^2}$ $(V=\frac{R}{r}\sqrt{\frac{3\cdot g\cdot H}{2}})$	$Me=\frac{2\cdot E}{V^2}$ $(V=\omega\cdot R)$	$Me=\frac{2\cdot E}{V^2}$ $(V=\omega\cdot R,\ \omega=\frac{2\pi\cdot N}{V^2})$

MODEL SELECTION (型号选定方法)

3 CONFIRMING THE RELATIVE ITEMS IN THE BOUND OF THE SPECIFICATION OF SHOCK ABSORBER (确认吸震器规格范围内的相关项目)

a. Energy absorbing per hour (每小时吸收能量)[Nm]

b. Maximum colliding speed (最高冲撞速度)[m/s]

c. Ambient temperature (周围温度)[℃]

d. Reverting time (复归时间)[s]

4 TO CALCULATE THE FACT ENERGY BY COLLIDING MODEL CUTLINE (根据冲撞模式图例计算实际能量)

Symbol explanation
(符号说明)
E=Total energy
(总能量) {Nm}
E_1=Kinetic energy
(动能) {Nm}
E_2=Work energy
(做功能) {Nm}

a. Kinetic energy..... To calculate the value of E_1 by colliding model cutline.
动能 根据冲撞模式图例计算E_1的值

b. Work energy..... To calculate the value of E_2 by colliding model cutline.
做功能 根据冲撞模式图例计算E_2的值。（关于算式中的S行程选定最大吸收能力超过E_1的型号，代入那个型号中的S即可。）

c. Total energy.....
(总能量)

Then, if the calculating result is more than Emax, selecting the other model that bigger than before and re-calculating. Getting E's value by calculating, re-selected model, if it is under Emax will be ok.
之后，计算结果如超过Emax（最大吸收能力），选定比前面已选定的型号大一号的吸震器，再度计算。通过计算得出的E值，再次选定型号，如在Emax之下即OK。

5 CONFIRMING ABOUT COLLIDING MATTER OF EFFECTIVE WEIGHT (冲撞物有效重量的确认)

Me=colliding matter effective weight(冲撞物有效重量)[kg]

a. To calculate the Me's value by colliding model cutline. (根据冲撞模式图例计算Me的值).

b. Me, We can calculate the conform Me with this term by selected Model 4, corresponding Me(specimen value) and the result of a.
(从用4选定的型号所对应的Me（样本值）和a的计算结果中，可选出符合本条件的Me。)
It can be used if the Me is in the bound of the selected Me(i.e. calculated value Me ∠ specification value Me)
(如果Me在选定的型号的Me范围内（即Me计算值∠Me规格值）即可使用。)

c. Please use bigger shock absorber if it exceeds the bound of selected Me by b, and remember to confirm them before using.
(如果超过通过b选定的型号中Me的范围，请选择大挡尺寸的吸震器，并请进行相同的确认。)

6 SUM FLOW CHART ABOUT CALCULATION 4・5 (4・5计算的概略流程图如下所示)

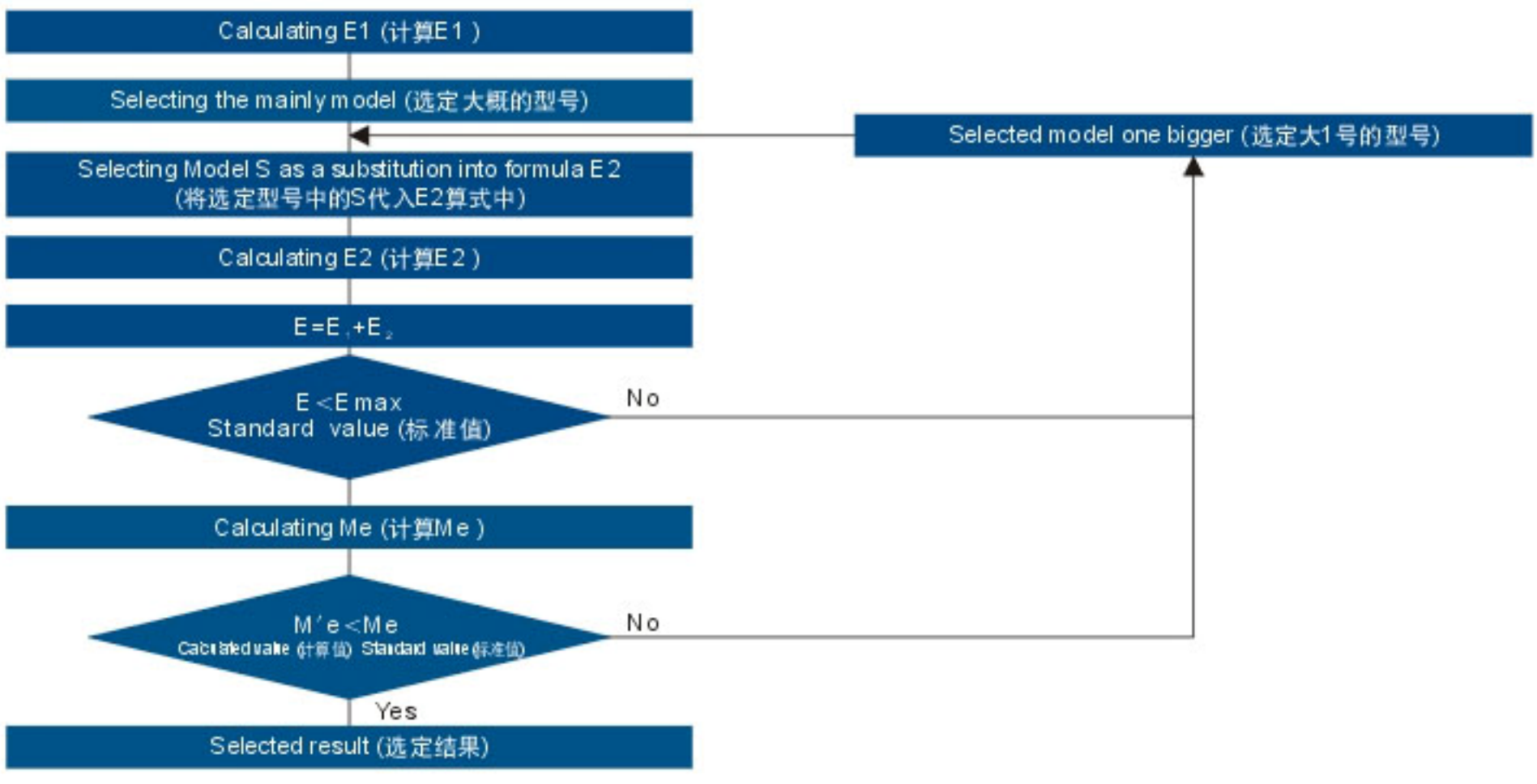

SELECTION APPLICATIONS (选用实例)

SELECTION APPLICATIONS（选用实例）

Simplex plane colliding
(单纯的水平冲撞)

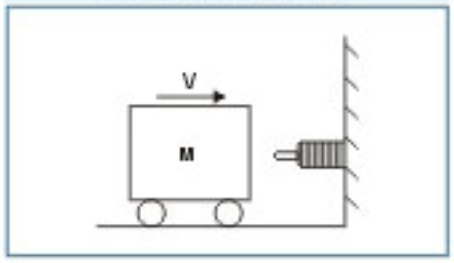

APPLICATION DATA（应用数据）	FORMULAS（计算公式）	CALCULATION（计算结果）
M=50Kg	$E_1=0.5MV^2$	$E_1=0.5\times50\times1.2^2=36Nm$
V=1.2m/s	$E_2=F\times S$	$E_2=0\times0.01=0Nm$
F=0N	$E=E_1+E_2$	E=36+0=36Nm
S=0.01m	$Me=2E/V^2$	$Me=2\times36/1.2^2=50kg$
Model SC1412-3 is adequate(可选用SC1412-3)		

With cylinder's thrust
(有气缸推力时)

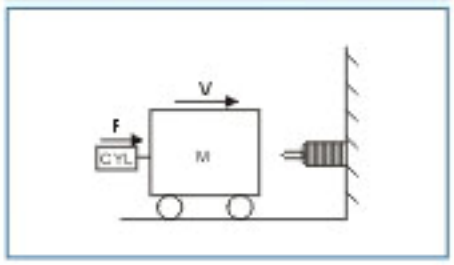

APPLICATION DATA（应用数据）	FORMULAS（计算公式）	CALCULATION（计算结果）
M=50Kg	$E_1=0.5MV^2$	$E_1=0.5\times50\times1.2^2=36Nm$
V=1.2m/s	$E_2=F\times S$	$E_2=250\times0.02=5Nm$
F=250N	$E=E_1+E_2$	E=36+5=41Nm
S=0.02m	$Me=2E/V^2$	$Me=2\times41/1.2^2=56.9kg$
Model SC2020-2 is adequate(可选用SC2020-2)		

With motor's thrust
(有马达推力时)

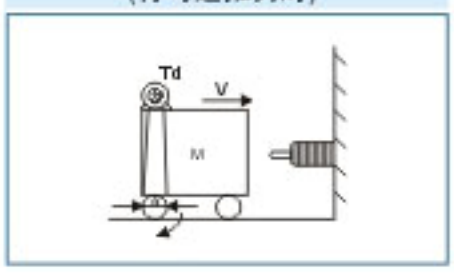

APPLICATION DATA（应用数据）	FORMULAS（计算公式）	CALCULATION（计算结果）
M=700Kg	$E_1=0.5MV^2$	$E_1=0.5\times700\times1^2=350Nm$
V=1m/s	$E_2=2K\times Td\times S/D$	$E_2=2\times0.5\times1000\times0.1/0.3=333Nm$
k=0.5	$E=E_1+E_2$	E=350+333=683Nm
Td=1000Nm	$Me=2E/V^2$	$Me=2\times683/1^2=1366kg$
D=0.3m		
S=0.1m		
Model MA64100 is adequate(可选用AD64100)		

Free falling
(自由落下)

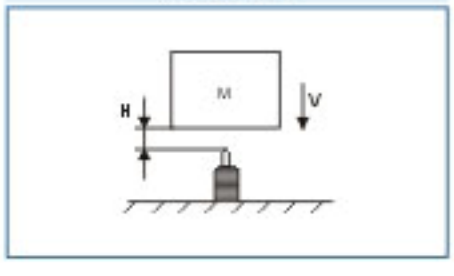

APPLICATION DATA（应用数据）	FORMULAS（计算公式）	CALCULATION（计算结果）
M=20Kg	$E_1=Mg\times H$	$E_1=20\times10\times0.05=10Nm$
H=0.05m	$E_2=Mg\times S$	$E_2=20\times10\times0.01=2Nm$
F=0N	$E=E_1+E_2$	E=10+2=12Nm
S=0.01m	$Me=2E/V^2(V=\sqrt{2\cdot g\cdot H})$	$Me=2\times12/1^2=24kg$
Model SC1210-3 is adequate(可选用SC1210-3)		

Simplex plane colliding
(单纯的水平冲撞)

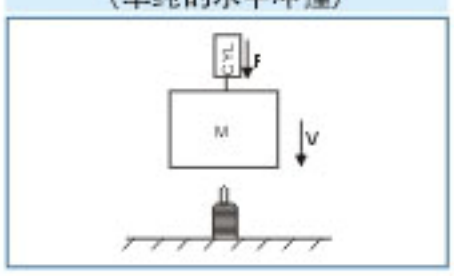

APPLICATION DATA（应用数据）	FORMULAS（计算公式）	CALCULATION（计算结果）
M=40Kg	$E_1=0.5MV^2$	$E_1=0.5\times40\times1^2=20Nm$
V=1m/s	$E_2=(Mg+F)\times S$	$E_2=(40\times10+100)\times0.016=8Nm$
F=100N	$E=E_1+E_2$	E=20+8=28Nm
S=0.016m	$Me=2E/V^2$	$Me=2\times28/1^2=56kg$
Model SC1416-3 is adequate(可选用SC1416-3)		

SELECTION APPLICATIONS (选用实例)

SELECTION APPLICATIONS（选用实例）

Cylinder upper limiter
(气缸上限限位器)

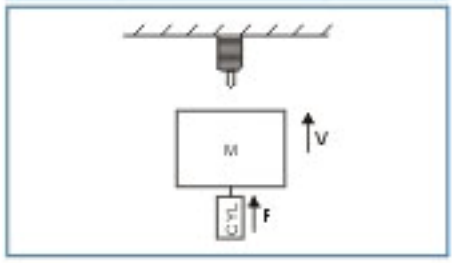

APPLICATION DATA (应用数据)	FORMULAS (计算公式)	CALCULATION (计算结果)
M=40Kg	$E_1=0.5MV^2$	$E_1=0.5\times40\times1^2=20Nm$
V=1m/s	$E_2=(F-Mg)\times S$	$E_2=(500-40\times10)\times0.016=1.6Nm$
F=500N	$E=E_1+E_2$	E=20+1.6=21.6Nm
S=0.016m	$Me=2E/V^2$	$Me=2\times21.6/1^2=43.2kg$
Model SC1416-3 is adequate (可选用SC1416-3)		

Free falling
(自由落下)

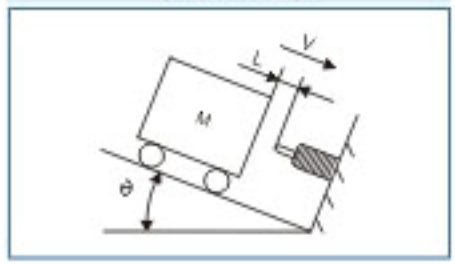

APPLICATION DATA (应用数据)	FORMULAS (计算公式)	CALCULATION (计算结果)
M=100Kg	$E_1=Mg\times L\times\sin\theta$	$E_1=100\times10\times0.5\times0.5=250Nm$
L=0.5m	$E_2=Mg\times S\times\sin\theta$	$E_2=100\times10\times0.05\times0.5=25Nm$
$\theta=30°$	$E=E_1+E_2$	E=250+25=275Nm
S=0.05m	$Me=2E/V^2(V=\sqrt{2gL\sin\theta})$	$Me=2\times275/5=110kg$
Model SC2050-2 is adequate (可选用SC2050-2)		

When cylinder pressure existing
(气缸压力存在时)

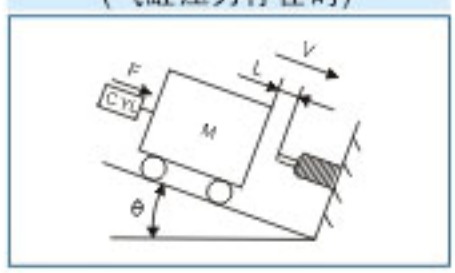

APPLICATION DATA (应用数据)	FORMULAS (计算公式)	CALCULATION (计算结果)
M=200kg	$E_1=0.5MV^2$	$E=0.5\times200\times2^2=400Nm$
V=2m/s	$E_2=(Mg\sin\theta+F)\times S$	$E_2=(200\times10\times0.5+300)\times0.05=65Nm$
$\theta=30°$	$E=E_1+E_2$	E=400+65=465Nm
F=300N	$Me=2E/V^2$	$Me=2\times465/2^2=232.5kg$
S=0.05m		
Model MA3650 is adequate (可选用AD3650)		

When cylinder pressure existing
(气缸压力存在时)

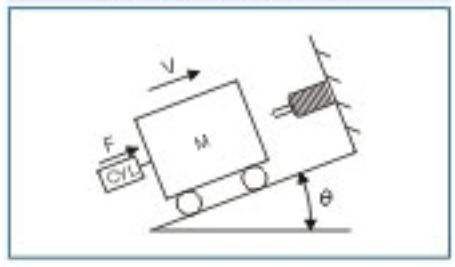

APPLICATION DATA (应用数据)	FORMULAS (计算公式)	CALCULATION (计算结果)
M=150kg	$E_1=0.5MV^2$	$E_1=0.5\times150\times1.5^2=168.75Nm$
V=1.5m/s	$E_2=(F-Mg\sin\theta)\times S$	$E_2=(1200-150\times10\times0.5)\times0.025=11.25Nm$
$\theta=30°$	$E=E_1+E_2$	E=168.75+11.25=180Nm
F=1200N	$Me=2E/V^2$	$Me=2\times180/1.5^2=160kg$
S=0.025M		
Model MA4225 is adequate (可选用AD4225)		

Free falling
(自由落下)

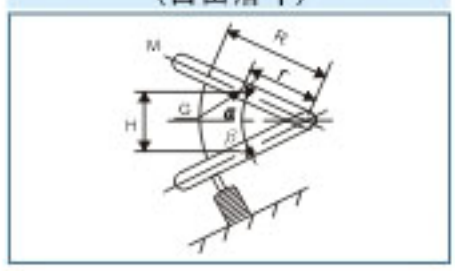

APPLICATION DATA (应用数据)	FORMULAS (计算公式)	CALCULATION (计算结果)
M=60kg	$E_1=MgH$	$E_1=60\times10\times0.4=240Nm$
H=0.4m	$E_2=Mg\times S\times r/R$	$E_2=60\times10\times0.03\times0.4/0.6=12Nm$
r=0.4m	$E=E_1+E_2$	E=240+12=252Nm
R=0.6m	$Me=2E/V^2(V=\frac{R}{r}\sqrt{2gH})$	$Me=2\times252/18=28kg$
S=0.03m		
Model SC2030-1 is adequate (可选用SC2030-1)		

SELECTION APPLICATIONS (选用实例)

SELECTION APPLICATIONS（选用实例）

The existing oftorsion ofmotor etc.
（马达等的扭矩存在）

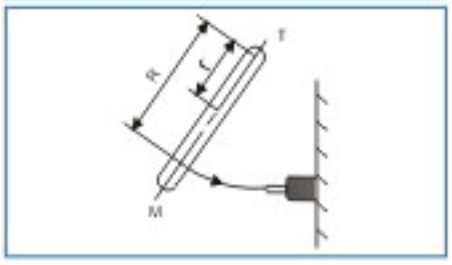

APPLICATION DATA（应用数据）	FORMULAS（计算公式）	CALCULATION（计算结果）
M=120kg	$E_1=0.5MV^2$ ($V=\omega R$)	$E1=0.5\times120\times(10\times0.4)^2=960Nm$
Td=400Nm	$E_2=Td*S/R$	$E2=400\times0.04/0.4=40Nm$
ω=10rad/s	$E=E_1+E_2$	E=960+40=1000Nm
R=0.4m	$Me=2E/V^2$ ($V=\omega R$)	$Me=2\times1000/4=500kg$
s=0.04m		
MODEL MA2540 IS ADEQUATE (可选用AD2540)		

The existing oftorsion ofmotor etc.
（马达等的扭矩存在）

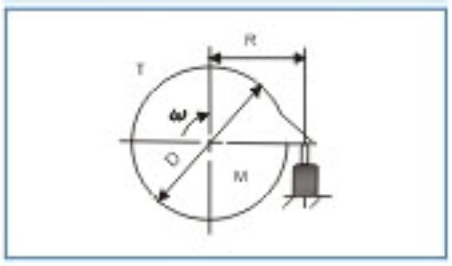

APPLICATION DATA（应用数据）	FORMULAS（计算公式）	CALCULATION（计算结果）
M=120kg	$E_1=0.5MV^2$ ($V=\omega D/2$)	$E_1=0.5\times120\times(5\times0.2)^2=60Nm$
Td=200Nm	$E_2=Td*S*2/D$	$E_2=200\times0.03\times2/0.4=30Nm$
ω=5rad/s	$E=E_1+E_2$	E=60+30=90Nm
D=0.4m	$Me=2E/V^2$ ($V=\omega D/2$)	$Me=2\times90/(5\times0.2)^2=180kg$
s=0.03m		
MODEL SC2030-3 IS ADEQUATE (可选用SC2030-3)		

ORDERING INFORMATION（型号选购信息）

SC · 2525 · 2 · □

- MA: Adjustable Mode (可调整式)
- SC: Multi-hole Non-Adjustable Mode (多孔不可调节)
- SCD: Double Direction Cushion Mode (双向缓冲式)
- Outside Diameter (外径)(mm)
- Stroke (行程)(mm)
- -1: High Impact Speed (高速)
- -2: Medium Impact Speed (中速)
- -3: LowImpact Speed (低速)
- Blank: With Cap (有撞击头)
- N: Without Cap (无撞击头)

温馨提示 Kind Notes

If weight and velocity of matters cause no much difference on absorbing energy, SC series of compensation shock absorber is preferred. If much difference, AD series of adjustable buffer is fine.
被缓冲物质量和速度变化引起吸收能量变化不大的场合，推荐使用SC系列自动补偿式缓冲器。
被缓冲物质量和速度变化引起吸收能量变化较大的场合，建议使用AD系列可调缓冲器。

EFFECTIVEWEIGHT (有效重量)

EFFECTIVE WEIGHT VALUE (有效重量值)

Effective weight is an important factor in selecting shock absorbers. A shock absorber "sees" the impact of an object in terms of weight and velocity only; it does not "see" any propelling force. The effective weight can be thought of as the weight that the shock absorber "sees" on impact. Effective weight includes the effect of the propelling force on the performance of the shock absorber. Failing to consider the effective weight may result in improper selection and poor performance of the shock absorber.

在选择缓冲器时，有效重量值是一个很关键的因素。通常在选择缓冲器时只注重质量和速度而已，忽略了推进力。考虑有效重量值被看作是注重冲击能。在缓冲过程中，有效重量值包含推力做功折算过来的质量。不考虑有效重量值可能会造成不恰当的型号选择和不好的缓冲效果。

A 3kg weight travelling at 6m/s has 54Nm of kinetic energy(figure A).On this basis alone, a SC2020-1 would be selected .However, because there is no propelling force, the calculated effective weight is 3kg-which is below the effective weight range of the standard SC2020-1. This is a high on-set force at the start of the stroke(figure B).

物体M=3Kg以速度V=6m/s移动(图A)，经由计算每次吸震能量E=54Nm/C，如果仅以每次吸震能量为选用条件，那SC2020-1是可应用的。也因为没有推进力的缘故计算出的有效重量值为Me=3Kg，比SC2020-1(5.9-25kg)5.9Kg的有效重量值范围还低，所以SC2020-1会造成在减速吸震行程之初会有强大的反作用力(流量孔口太小)，图B的曲线是代表在吸震行程的开始会发生强大的反弹。

A weight of 3kg has an impact velocity of 0.2m/s with a propelling force of 1178N(figure C). The total impact energy is 30Nm. Again, a SC2020-2 would be selected based just on the energy. The effective weight is calculated to be 1499kg. This is well above the range of the standard SC2020-2. If this shock absorber is used, high-set-down forces will result (figure D).

物体M=3Kg在有附加推进力(气缸)F=1178N(图C)，以速度V=0.2m/s移动着物体，经由计算每次吸震能量E=30Nm，如果仅以每次吸震能量为选用条件那SC2020-2(38Nm/c)是很足够的选择。经由计算有效重量值是Me=1,499kg，比SC2020-2(19-98kg)的98kg高很多，会造成在减速行程结束时，末端产生强大的反作用力(流量孔口太大)，图D的曲线是代表无法停止冲击的物体，在吸震行程的结束会发生强大的反弹。

Figure A(图A):

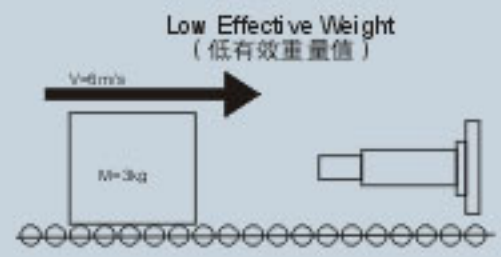

Figure B(图B):

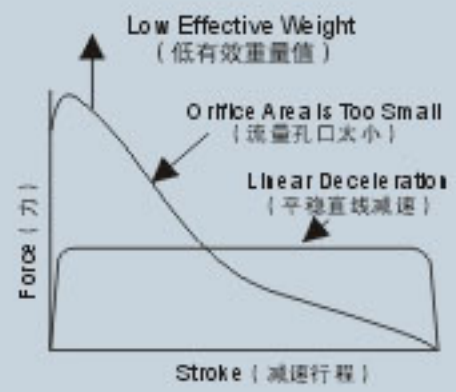

Figure C(图C):

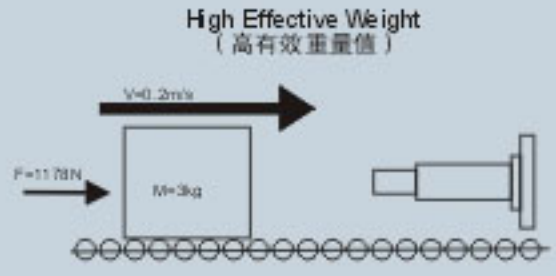

Figure D(图D):

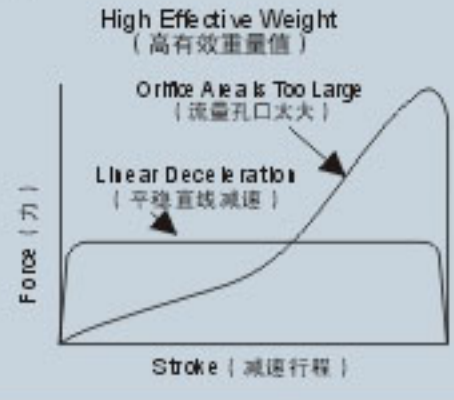

INSTALLATION NOTES (安装注意事项)

EA SHOCK ABSORBERS INSTALLATION NOTES (EA缓冲器安装注意事项)

- Impact force faces shock absorber's core when EA shock absorber be installed. Side angle not above 5° to avoid momentary oil leak caused by side pressure.
- Fix shock absorber, avoid shock absorber becoming loose to cause side pressure oil leak and break screw.
- Don't unbuild head if shock absorber has the head, unbuilding head will prolong piston rod, which makes the rod reach and break bottom, influence lifetime.
- If shock absorber has no head, shock absorbing face should have enough hardness to bear pressure.
- Check piston rod to be clean, without dusty things or metal scraps, ensure glide part of piston rod not be scraped.
- Don't paint or abrase screw of outer tube, heat emanation and installation will be influenced.
- For SC series, don't run back bottom srew.
- When synchronizingly install two shock absorbers, same type, same step, two adjustable shock absorbers should be avoided to be installed at the same step.
- When side angle is too big, please use side load adapter.

- 安装时保证被缓冲物的冲击力沿着缓冲器的轴芯方向，偏角不要大于5°，避免心轴被侧压引起瞬间漏油。
- 固定好缓冲器，防止缓冲器松动产生侧压漏油和损伤螺纹。
- 有缓冲头的缓冲器请勿拆下缓冲头，拆下缓冲头相当于加长了活塞杆，会使活塞杆撞到底部，从而破坏缓冲器底部、影响缓冲器的使用寿命。
- 使用无帽缓冲器，需保证被缓冲面有足够的硬度承受压强。
- 检查活塞杆上有无异物杂质锈屑等，保证活塞杆滑动部位不被划伤。
- 请勿在外管螺纹上喷漆或者损伤螺纹，会影响缓冲器散热和安装。
- SC系列缓冲器，请勿回转底部螺丝。
- 同步安装两个缓冲器时，确保是同一型号，同步动作，尽量避免同步安装两只可调缓冲器。
- 偏心角度过大时，请使用偏心角度转接器。

APPLICATION EXAMPLES (应用实例)

APPLICATIONS(应用实例)

Cylinder without leader
(无杆气缸)

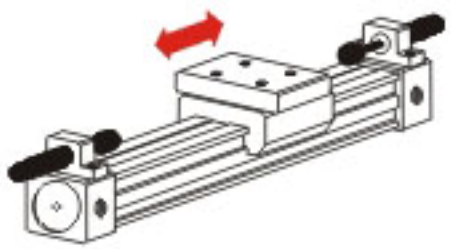

Cylinder
(气缸)

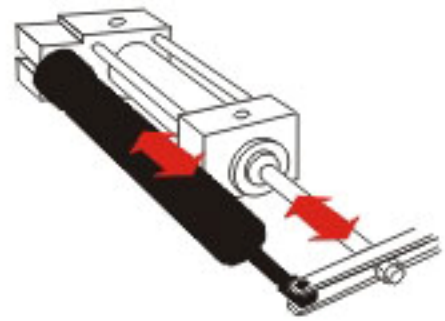

Combined air pressure manipulator
(气压机械手组合)

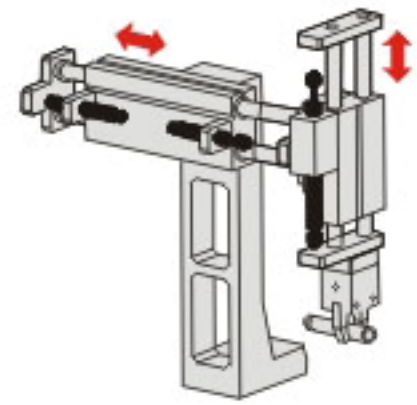

Lathe
(机床)

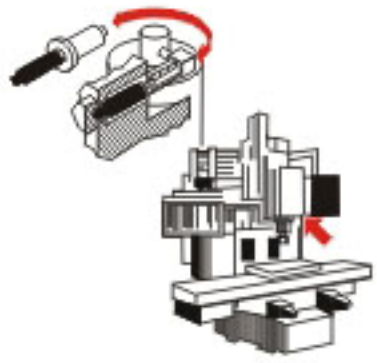

Robot
(机械手)

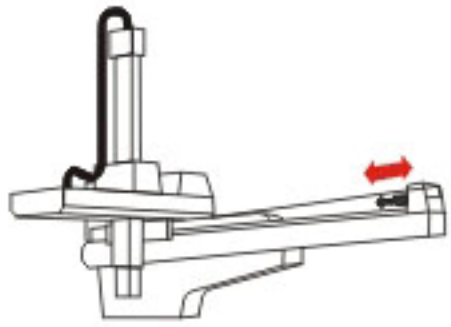

Automotine assembly line
(汽车组装线)

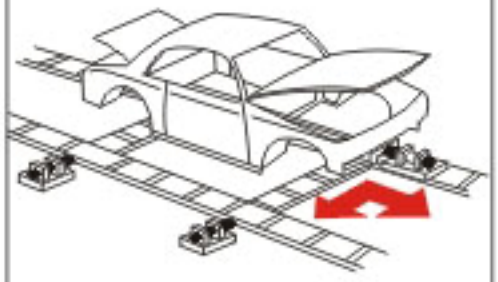

Conveyor for casting
(铸造应用的传送线)

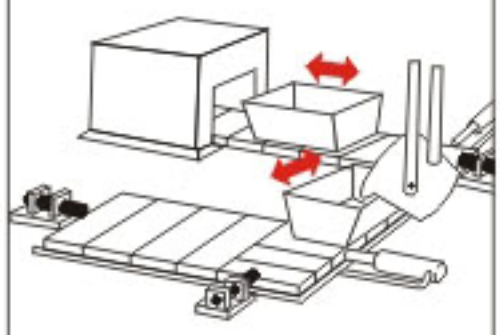

Pachaging equipment
(包装机器)

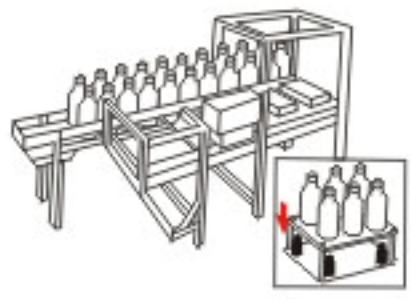

Glass forming equipment
(玻璃成型设备)

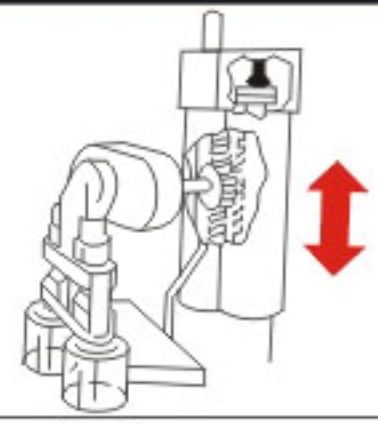

HYDRAULIC SPEED CONTROLLERS (液压速度控制器)

HR SERIES (HR系列)

Model (型号)	Maximum stroke (最大行程)	Working temperature (工作温度)	Maximum load (最大负荷)
HR12	12mm	-10-70℃	350kgf
HR15	15 mm	-10-70℃	350kgf
HR30	30 mm	-10-70℃	350kgf
HR60	60 mm	-10-70℃	350kgf
HR80	80 mm	-10-70℃	350kgf
HR100	100mm	-10-70℃	350kgf

FEATURES (特征)

1.Button at end can be adjusted to the speed you want.

2.Special hydraulic oil, inner room sealed fully, ensure long-term and stable lifetime.

3.High tensile steel body, hard and glossy piston rod.

4.Continuous, equal, strong resistance, fully controls effect you want.

EA精密稳速器的特点

1、通过调节尾部的调整旋钮，能调出您需要的控制速度。

2、专用液压油，完全密封的内部，能保证缓冲器性能的长期稳定。

3、高负载刚性本体，坚硬光滑的活塞杆。

4、持续、均匀、强劲的阻尼力，完全能控制出您需要的效果。

HR SERIES (HR系列)

HR SERIES (HR系列)

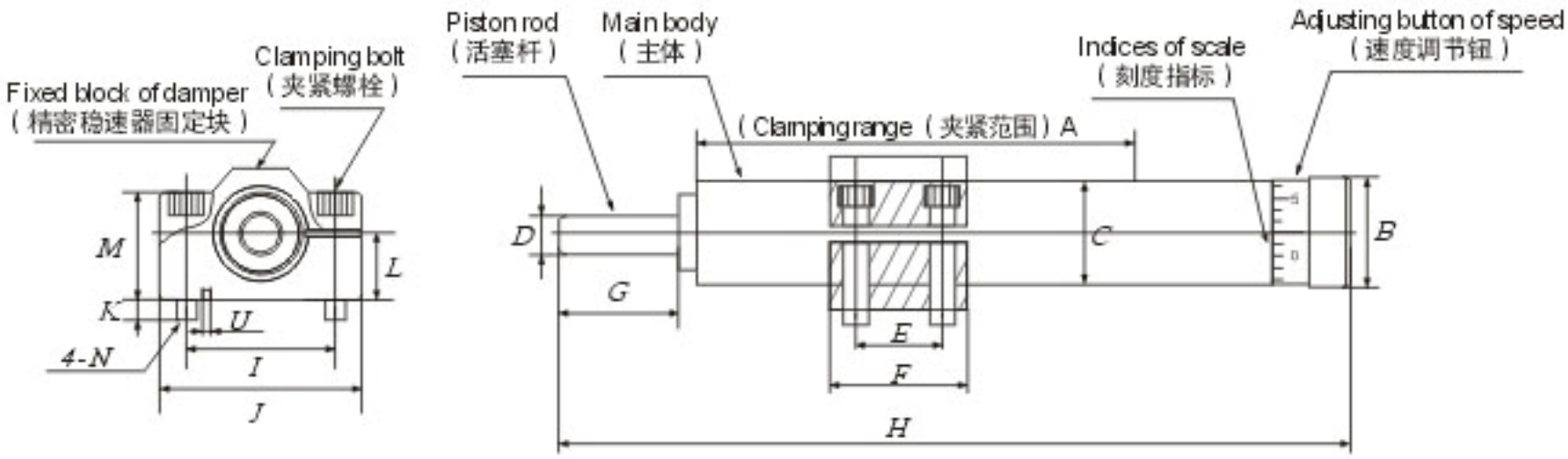

Model（型号） / Size Mark（尺寸记号）	A	B	C	D	E	F	G	H	I	J	K	L	M	N	U
HR12	68	28	24	9	20	32	12	142	38	52	7	17	28	5	2
HR15	85						15	155							
HR30	112						30	202							
HR60	156						60	277							
HR80	199						80	342							
HR100	232						100	395							

EXAMPLES OF APPLICATION (应用范例)

Drill press, drill hole
(钻床钻孔)

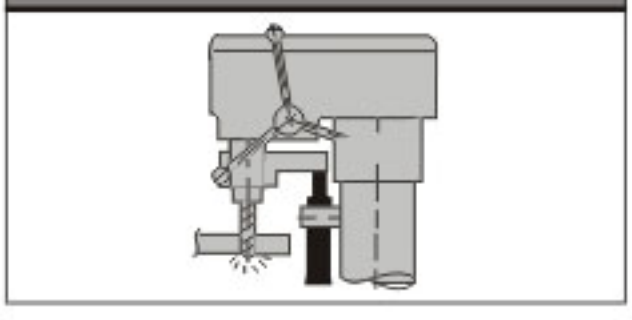

Circular saw cutting
(圆锯机切削)

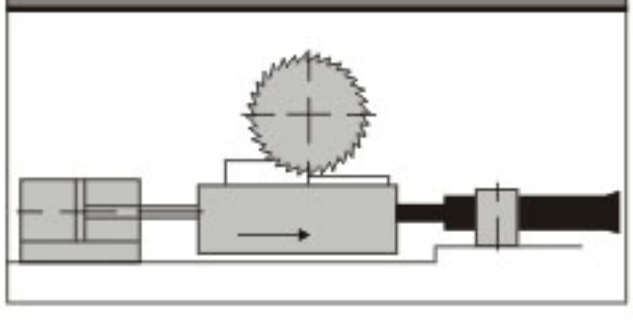

Platform drill hole
(平台钻孔)

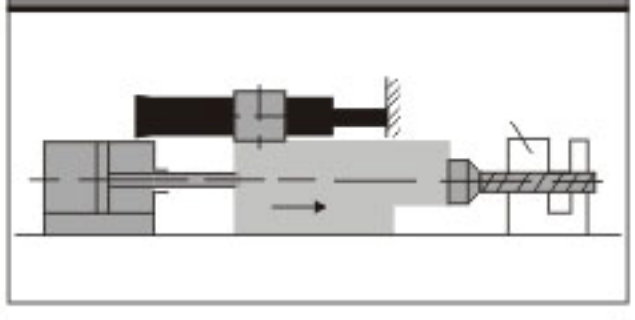

Lathe turning tool cutting
(车床车刀切削)

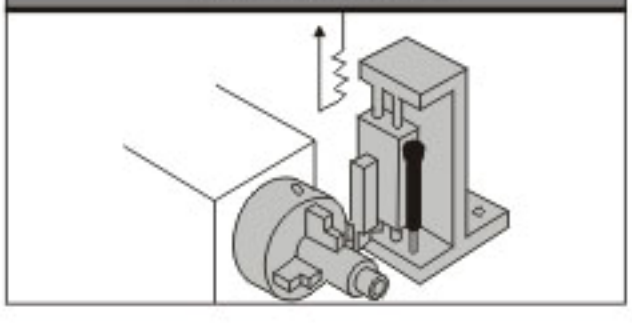

Pneumatic aiguille drill hole
(气动钻头钻孔)

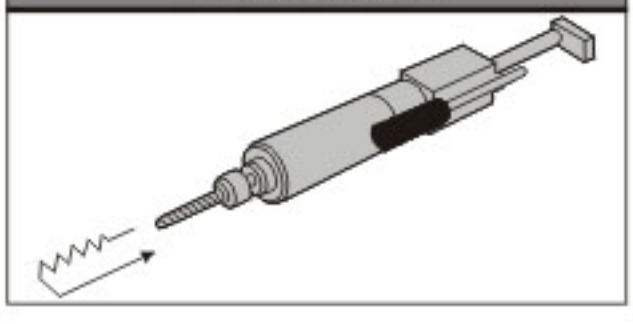

Slide carriage stable speed
(滑座稳速)

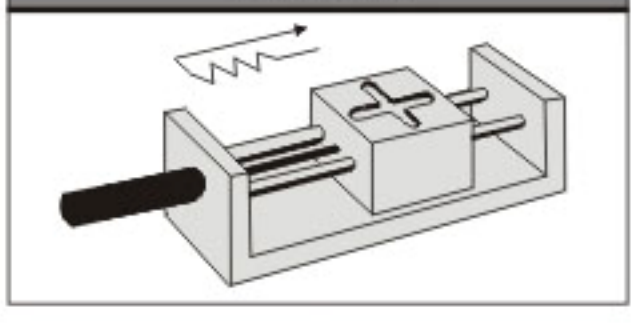

STOP COLLARS (定位停止螺帽)

STOP COLLARS（定位停止螺帽）

To reduce noise farthest,a rubber cap for stopping noise is used in the head of shock absorber. When the cap is pressed,it deforms,which will change precise position of equipment.So, a metal collar with thread inside will be placed onto the metal outer tube of shock absorber to act as stop collar.Adjusting the position of stop collar,the equipment position will be well ensured.

为了尽可能的降低噪音，油压缓冲器头部采用橡胶消音套，橡胶消音套受压时会产生变形，不能保证机器的精确定位，因此采用一个有内螺纹的金属套筒作为定位停止螺帽套在缓冲器金属外管的头部，调节好定位停止螺帽的位置就能很好的保证机器的精确定位。

APPLICATIONS（应用实例）

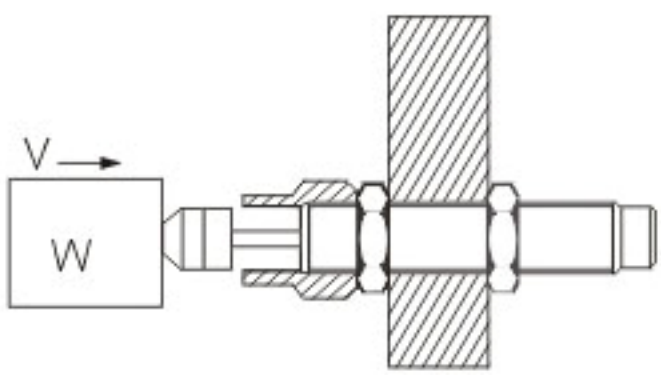

Before impacting
受撞前

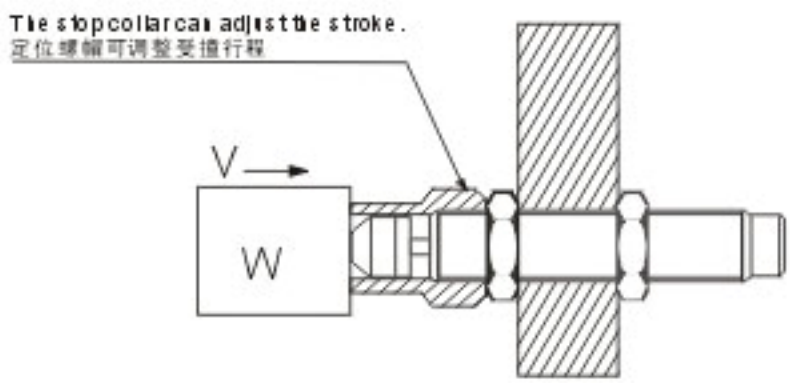

After impacting
受撞后

STOP COLLARS (定位停止螺帽)

STOP COLLARS（定位停止螺帽）

Specification (规格)	Dimensions (尺寸)	Applicable for shock Absorber Model (适合用的缓冲器规格)
SC 08	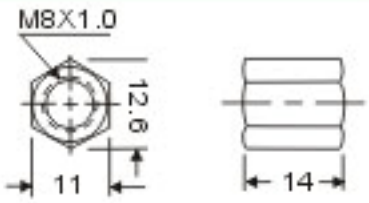	*AC-0806
SC 10	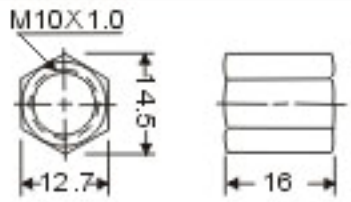	*AC-1005 *AC-1007 *AC-1008
SC 12	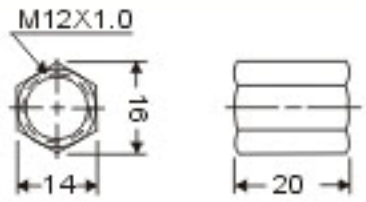	*AC-1210
SC 14	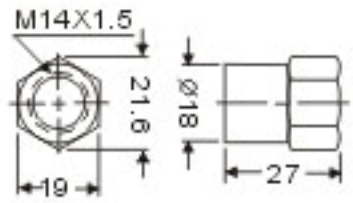	*AC-1412 *AD-1410 *AC-1415 *AD-1415 *AC-1416 *AC-1420

Specification (规格)	Dimensions (尺寸)	Applicable for shock Absorber Model (适合用的缓冲器规格)
SC 20	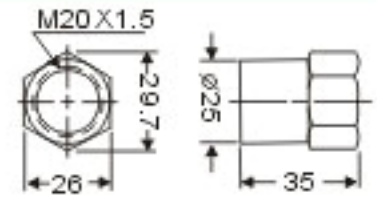	*AC-2015 *AD2016 *AC-2020 *AD-2025 *AC-2030 *AC-2050 *ACD-2030
SC 25	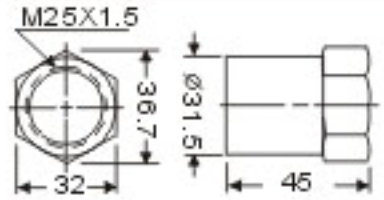	*AC-2525 *AD-2525 *AC-2550 *AD-2530 *AC-2580 *AD-2550 *AD-2580
SC 40	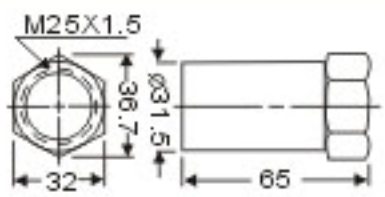	*AC-2540 *AD-2540
SC 50	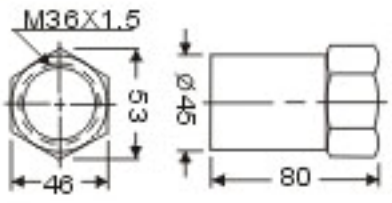	*AC-3660 *AD-3625 *AD-3650

MOUNTING FLANGE (安装法兰)

Specification (规格)	Dimensions (尺寸)	Applicable for shock Absorber Model (适合用的缓冲器规格)
F 36	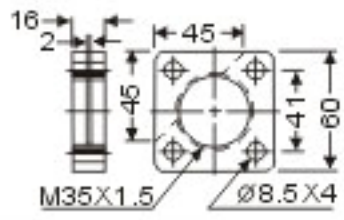	*AC-3660 *AD-3650
F 42	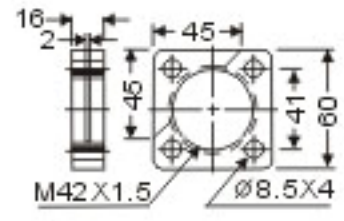	*AD-4225 *AD-4250 *AD-4275
F 64	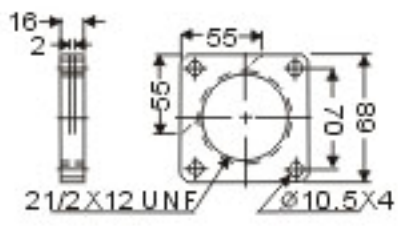	*AD-64050 *AD-64100 *AD-64150

SIDE LOAD ADAPTERS (偏心传接器)

SIDE LOAD ADAPTERS （偏心传接器）

With side load impact angles of more than 5° the operating lifetime of the shock absorber reduces rapidly due to increased wear of the rod bearings. The optional side load adapter provides a long lasting solution.

Material: Threaded body and plunger, hard-ened high tensile steel

当冲击力与轴心角度大于5° 时，增加了活塞杆轴承的损伤，缓冲器使用寿命会大大降低，使用偏心转接器能很好的解决这个问题。

材质：螺纹本体，光滑坚硬芯棒，经过热处理高张力钢材。

SIDE LOAD ADAPTERS (偏心传接器)

For Side Load in Excess Of 5° (使用偏心转接器后冲击角度可大于5°)

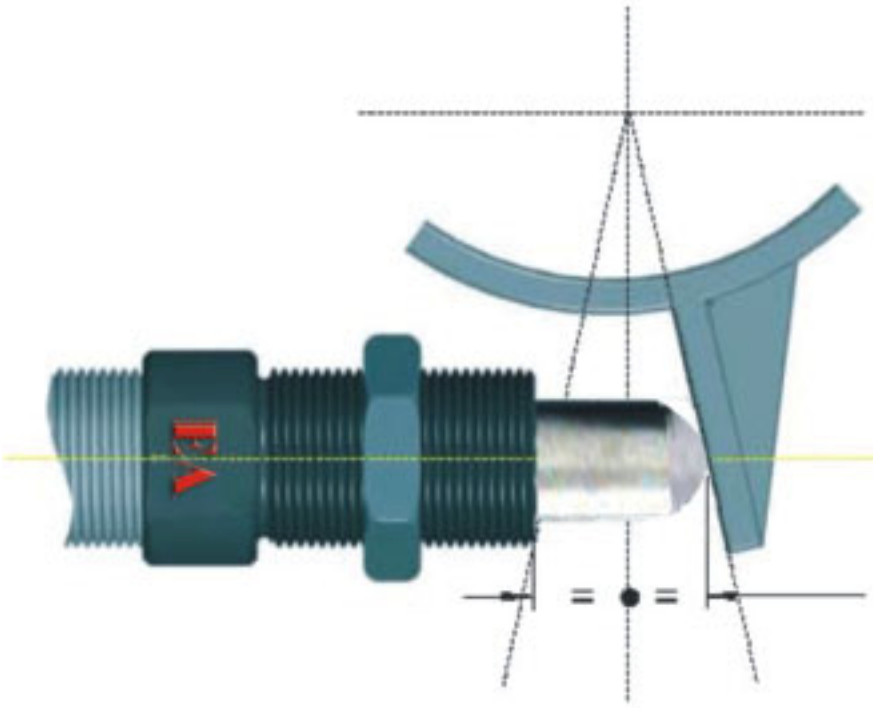

Problem: Rotary motion of the striking surface creates side load,which develops a bending moment on the piston rod. This can bend the rod in some cases.In all cases, side load will reduce seal and bearing life.

Solution: Use side load adapter.

旋转运动会在冲击面产生侧压，这样产生了使活塞杆弯曲的机会，在某些情况下会使活塞杆弯曲。如果总是有侧压，也会减少密封件和轴承的寿命。

解决办法：使用偏心转接器

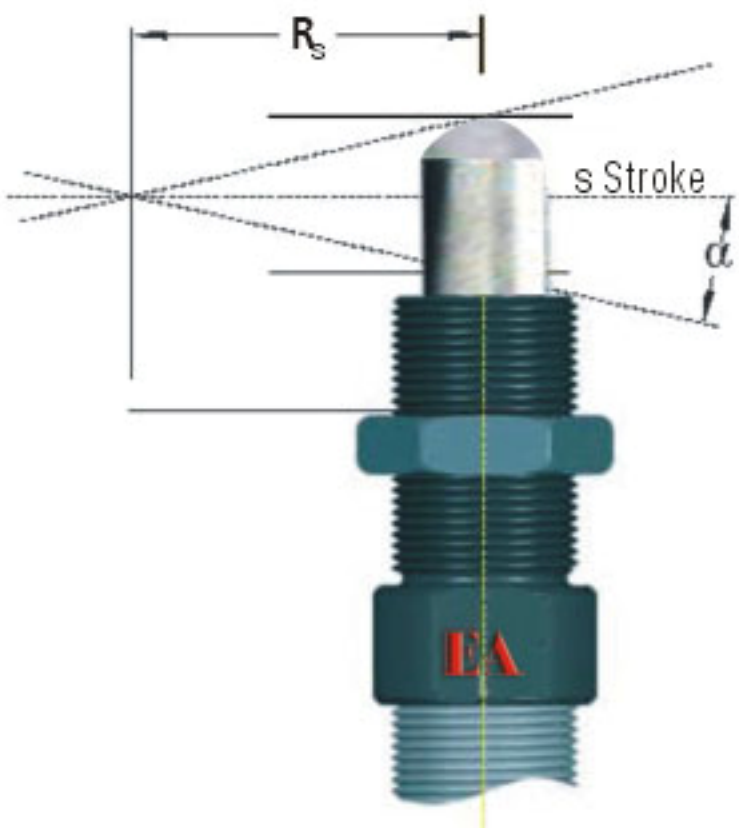

Formula(公式):

$\alpha = \tan^{-1}\left(\frac{S}{2.Rs}\right)$

$R_{smin} = \frac{S}{2.\tan \alpha_{max}}$

Example(例子):

S=0.98(25mm)

$\alpha_{max}=25°$

$R_s = 3.94(100mm)$

$\alpha = \tan^{-1}\left(\frac{0.98}{2 \cdot 3.94}\right)$

$\alpha_{max}=(7.09)°$

$R_{smin} = \frac{0.98}{2.\tan 25}$

$R_{smin}=1.05(27mm)$

α =angle of impact （冲击角度）

α_{max}=maximum angle of impact （最大冲击角度）

s=stroke （行程）

R_s=radius （半径）

R_{smin}=minimum radius （最小半径）